185 Berry St., Suite 5100
San Francisco, CA 94107
t: 415.856.3000
f: 415.856.3001
www.perkinswill.com

PERKINS
+WILL

Memo

To:	Thomas Rogers, City of Menlo Park
From:	Geeti Silwal
Date:	15 March 2012
Subject:	Task B & C. Station Area and ECR SE Façade Height, Building Height and Bulk Control Revisions and Task E. Building Height Revisions (ECR NE and ECR NE-R)

Purpose

To evaluate façade height, building height, and building bulk and massing controls in the Station Area (SA E and SA W) and the El Camino Real –Southeast (ECR SE) Zoning Districts in order to break down the scale of buildings and increase architectural interest while considering building viability and feasibility. To establish an appropriate maximum building height for the ECR NE and ECR NE-R zoning districts, associated with provision of Public Benefit. Although these tasks primarily relate to specific zoning districts, some associated concepts affect development standards and design guidelines more broadly, and apply to other Specific Plan areas.

Key Findings/Recommendations for Specific Plan Revisions

1. Set the location of building envelope requirements at the minimum setback line versus at the façade plane.
2. Reduce the façade height requirement from 45’ maximum to 38’ maximum in the SA E, SA W, and ECR SE zoning districts
3. Reduce the building height in SA W from 60’ to 48’
4. Increase the maximum height in the ECR NE and ECR NE-R zoning districts from 38’ to 48’, if Public Benefit is provided
5. Bulk Controls: Above the maximum façade height of 38’, the maximum allowable façade length is limited to 175’. The bulk requirement of a 200’ diagonal over a 45’ height limit has been removed

6. Enhance design guidelines to recommend a hierarchy of façade modulation and roof line breaks to reduce apparent building massing and increase architectural interest
    - Minor Building Façade Modulation: Building Facades facing public rights-of-way or public open spaces may not exceed 50 feet in length without a minor facade modulation. At every 50' façade length, a minor facade modulation is either a 2' deep x 5' wide recess or a 2' setback of building plane from the primary building façade.
    - Major Building Façade and Height Modulation: Building Facades facing public rights-of-way or public open spaces may not exceed 100 feet in length without a major facade and height modulation. At every 100' façade length, a major facade modulation is either a 6' deep x 20' wide recess or a 6' setback of building plane from the primary building façade for the entire height of the building; accompanied with a height modulation of a minimum height of 4'. In addition to the major façade and height modulation a major change in fenestration pattern, materials or color is required.
7. Establish the following to enhance building interest, which would be more broadly applicable throughout the Plan Area:
    - Permit habitable projections within the setback and, where feasible, right-of-way, subject to length limits. Such projections would continue to be considered Gross Floor Area (GFA) and as such would continue to be counted toward a site's FAR.
    - Permit ground-level elements, such as walls, stairs, and elevated private space within the setback area provided the minimum sidewalk dimension required is achieved.
    - Set detailed standards for ground-floor treatments, addressing topics such as rhythm of bays, floor-to-floor heights, recessed windows and doors, and related items.

Methodology

Starting with the setback and bulk controls in the Draft Specific Plan, Perkins+Will systematically reviewed and refined the controls for prototypical parcels in the SA and ECR SE zoning districts, to achieve finer grain, by investigating the following:

- Maximum height
- Façade height
- Setbacks
- Façade Modulation
- Projections
- Ground Floor Articulation

Particular attention was paid to portions of buildings above the façade height of 38 feet to ensure that stepbacks and bulk controls allowed for viable floor plates. Building modulation was based on the study of

typical lot sizes in the Study Area and buildings that community workshop attendees responded positively to. For this effort, a variety of mixed-use projects were considered.

Perkins+Will conducted a design analysis to test fit the maximum office Public Benefit Bonus FAR of 0.75 (½ of 1.50) and Density of 50 du/ac and to confirm/revise the FAR, Density and maximum building height specified for zoning district ECR NE and ECR NE-R in the Specific Plan. This effort was done in conjunction with Task G – Development Intensity Accommodation Study.

Discussion of Findings

Attachments on the following pages outline findings and proposed revisions. Limited discussion of the key findings follows.

45 Degree Building Profile

The study for placement of building envelope determined that the 45 degree building profile requirements set at the minimum setback line versus at the façade plane allow for greater flexibility and variation in height/façade. **(See Attachment B/C.i).** For example, buildings at the minimum setback would have their upper stories stepped back. Alternatively, buildings setback far enough from the street could have minimal or no upper story stepbacks, as long as the building fit within the building envelope. Such an approach allows for variation of buildings along the street, and would also address a comment from Stanford University regarding façade height flexibility.

Building Height Reduction and Increases

Perkins+Will studied a variety of mixed-use building sections to determine ideal façade and overall heights. The following assumptions were made for floor to ceiling heights:

- Ground floor retail = 15’
- Residential = 10’
- High ceiling residential = 18’
- Office = 15’
- Ground floor garage = 10’
- Upper floor garages = 9’

An appropriate façade height that allows optimum flexibility to accommodate different mixed-use buildings was determined, with the overall intent of balancing the preferences expressed in community workshops while still achieving feasible and standard building forms. **(See Attachment B/C.ii).**

Based on the analysis of typical use arrangements, Perkins+Will identified four different building profiles for the Study Area:

- Building Profile 1: Façade Height – 30’; Building Height – 38’
- Building Profile 2: Façade Height – 38’; Building Height – 38’

- Building Profile 3: Façade Height – 38'; Building Height – 48'
- Building Profile 4: Façade Height – 38'; Building Height – 60'

The City Council provided direction regarding maximum building heights in three zoning districts. In particular, the Council directed that staff and the consultant reduce the SA W district building height (formerly proposed at 60') by one full story and increase the ECR NE and ECR NE-R building height (formerly proposed at 38') district by one full story. The latter increase would be structured as a Public Benefit Bonus. As a result of the building profile analysis above, all three districts are proposed to have maximums in line with Building Profile 3, which has a façade height of 38' and a building height of 48'. The revised height limits for all districts are as marked up in **Attachment B/C.iii.**

As part of the ECR NE and ECR NE-R height analysis, these districts' density/intensity standards were reviewed. The Draft Specific Plan's Density for ECR NE-R, with the 38' height limit, can accommodate residential projects using the Base density but it cannot accommodate residential projects using the Public Benefit Bonus density. To achieve the Public Benefit Bonus density, a typical residential project would increase height to avail the Bonus Height limit of 48'. In this case, public benefit can be inferred by increasing the height limit.

The Draft Specific Plan's FAR for ECR-NE and ECR NE-R, with the 38' height limit, can accommodate office use projects using either the Base or Public Benefit Bonus FAR, particularly when only ½ of the FAR is allowable for office development. In this case, no public benefit can be inferred by increasing the height limit.

Hence the proposed Public Benefit Bonus height increase would most likely be proposed as part of a residential project also requesting the Public Benefit Bonus density standard, and would be less likely for commercial projects or Base residential projects. However, individual proposals may differ.

Bulk Guidelines

Perkins+Will studied in-depth the massing, form and bulk guidelines for two building profiles:

- Building Profile 2, a low scale building with no stepback requirements
- Building Profile 4, a taller building with stepback requirements mandated by the 45 degree profile for façades facing streets;

The studies helped confirm and/or refine the design guidelines to increase architectural interest **(See Attachment B/C.iv)**. Three-dimensional studies of Building Profile 2 and Building Profile 4 analyzed the building height, setbacks, façade modulation, façade projections and ground floor articulation of commercial and residential buildings. The studies focused on the pedestrian experience of what the Plan Area is planned to be. Street views at eye level from the sidewalk along the building and from the sidewalk across the street, were used to effectively simulate the pedestrian experience and study the recommended guidelines.

A change in the bulk controls has been recommended to allow for flexibility and viability of floors above the 38-foot height. The maximum continuous floor length of 175 feet for all portions of the building proposed in the Draft Specific Plan remains; however the maximum diagonal length of 200 feet has been removed. The 200-foot diagonal was analyzed to be restrictive for the viability of the floors above 38 feet

when the development parcels are deep hence it was removed. **(See Attachment B/C.v)**. In addition the façade modulations discussed in **Attachment B/C.iv and vi.** help break the apparent bulk and mass of the buildings.

Façade Modulation Guidelines

Perkins+Will studied and analyzed the existing Plan Area Menlo Park buildings and precedent building images that community workshop attendees reacted positively to and worked with architects to revise the architectural façade modulation and roof line breaks that will promote architecturally interesting buildings **(See Attachment B/C.vi)**.

The design guidelines derive their basic modulation from a typical Downtown lot width of about 50'. Modulation in height and façade, and variation in roof line emulate the finer grain fabric that would result from distinct 50' wide buildings.

The minor variation in roof line of 4' could be achieved by a modulation of the parapet height and form. (Note: Parapets and screened mechanical equipment can extend beyond the maximum height limit allowed.)

References

- Existing building precedents from Menlo Park and surrounding cities
- California Building Code, Part 2 – Volume 1

Attachments

- Attachment B/C.i – Placement of Building Envelope
- Attachment B/C.ii – Potential Building Sections in Plan Area
- Attachment B/C.iii – Table E2. Development Standards Revised
- Attachment B/C.iv – Height, Massing, Bulk, Façade Articulation Guidelines Study
- Attachment B/C.v – Bulk Control Study
- Attachment B/C.vi – Building Façade Articulation Analysis

Residential Building

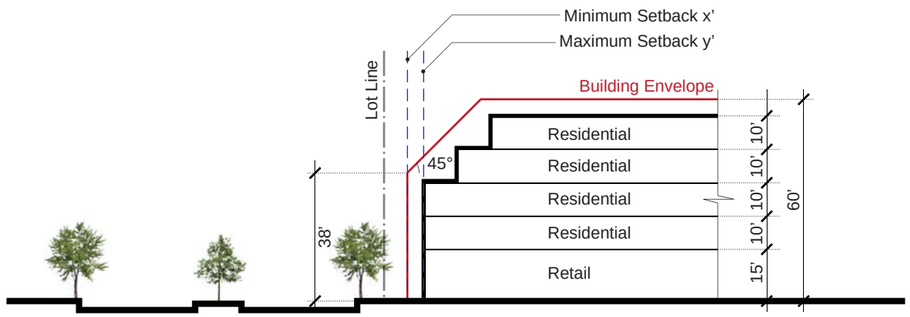

Section

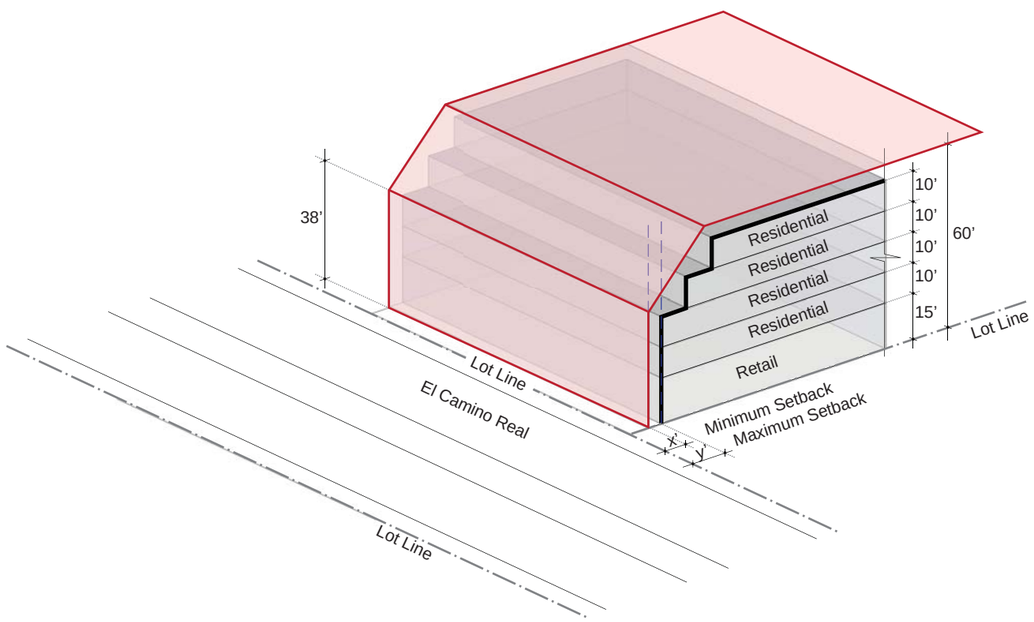

Office Building

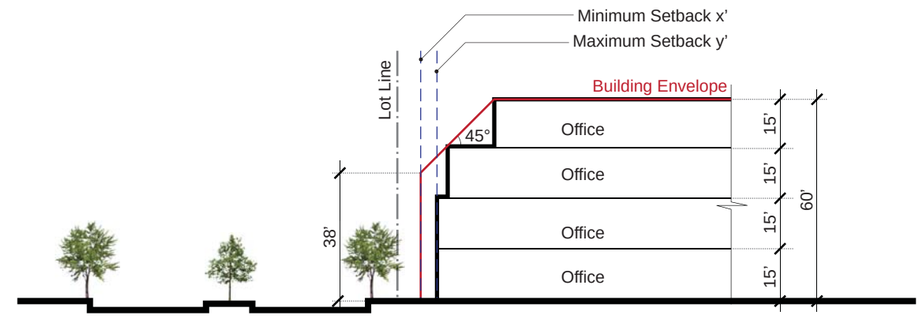

Section

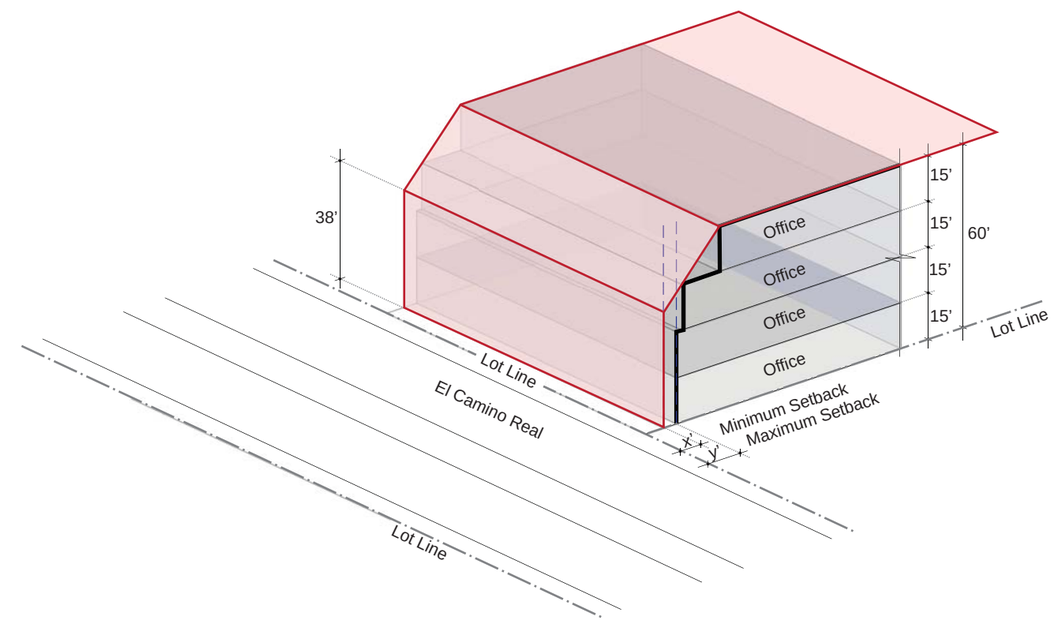

Placement of Building Envelope

10 February 2012

El Camino Real/Downtown Specific Plan
City of Menlo Park

PERKINS + WILL

ATTACHMENT B/C.i

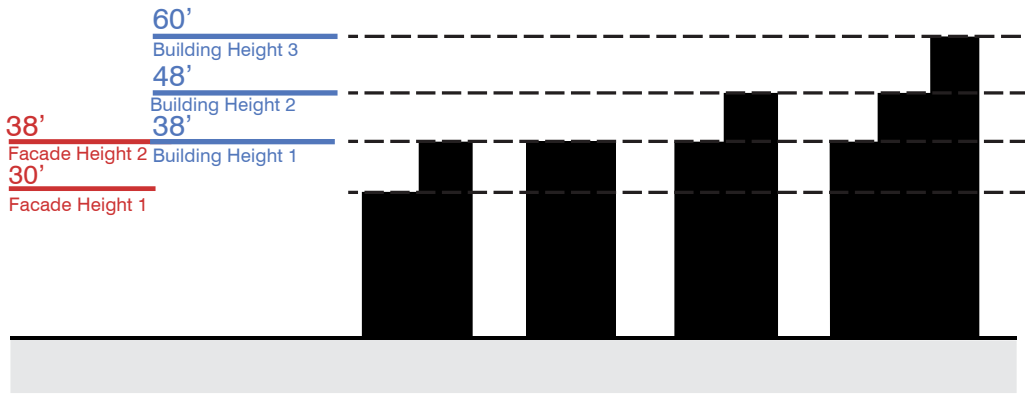

4 Building Profiles

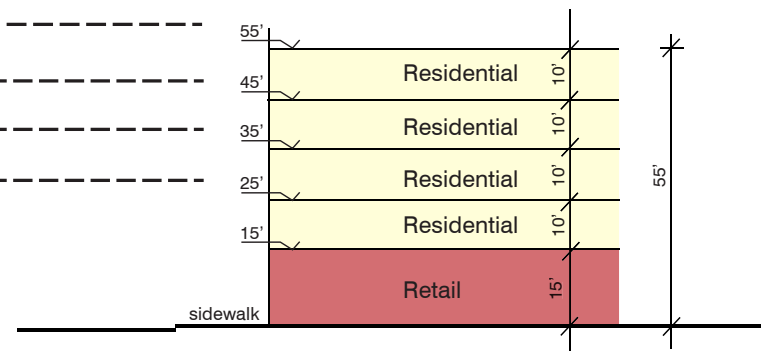

4-story Residential over Retail

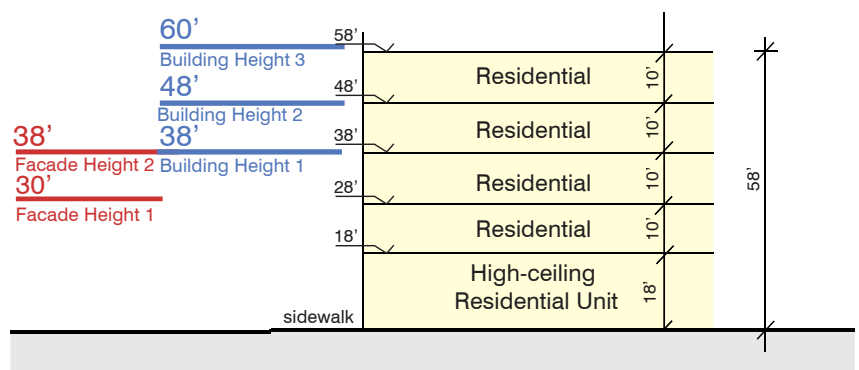

4-story Residential over Ground Floor High-ceiling Residential Unit

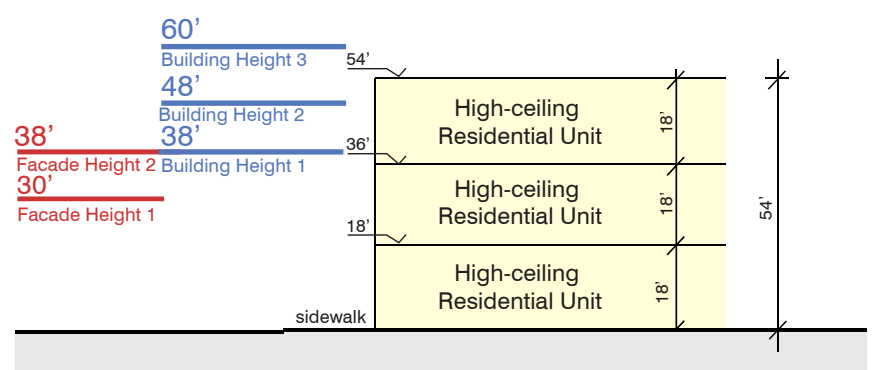

3-story High-ceiling Residential Unit

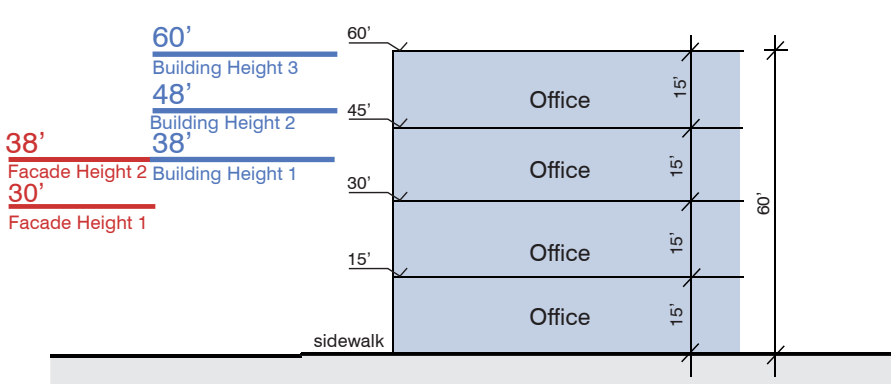

4-story Office

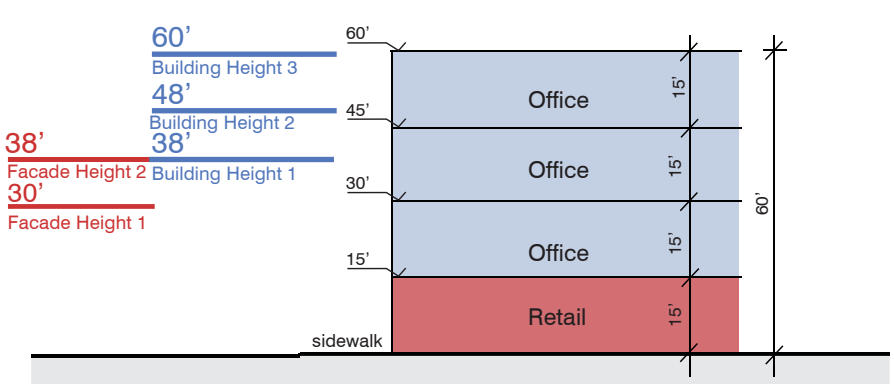

3-story Office over Retail

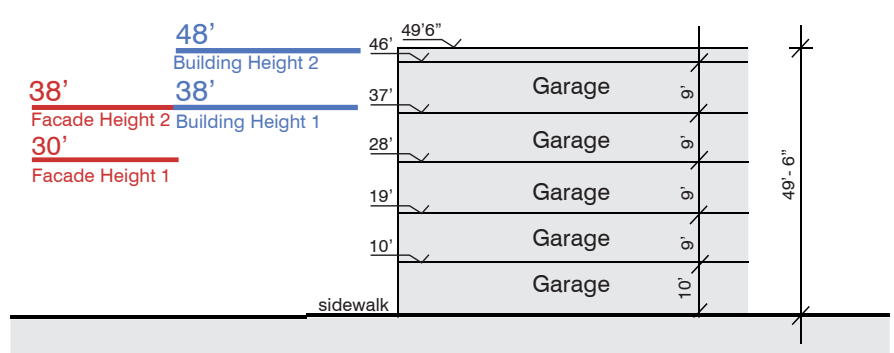

5 levels of Garage (including roof parking)

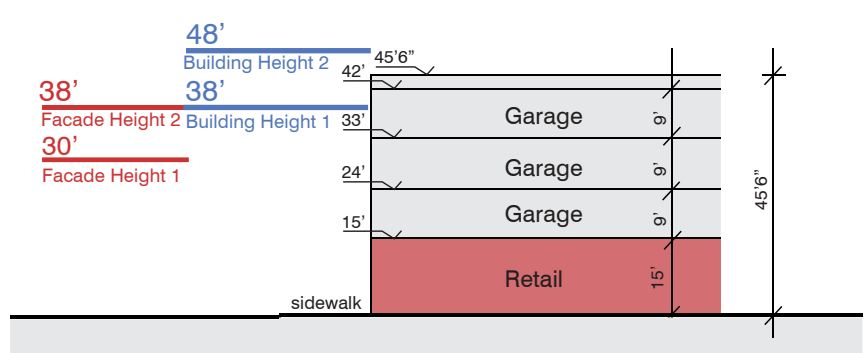

3 levels of Garage over Retail

Potential Building Types in Plan Area

9 February 2012

El Camino Real/Downtown Specific Plan

City of Menlo Park

PERKINS + WILL

ATTACHMENT B/C.ii

Development Standards								
				DEVELOPMENT INTENSITY			BUILDING HEIGHTS	
AREA				LAND USE	FAR*	DU/ACRE	HEIGHT MAX.	FAÇADE HEIGHT MAX.
El Camino Real	El Camino Real North	ECR NW	El Camino Real North-West	Mixed Use/ Residential	1.10 (1.50)	25.0 (40.0)	38'	~~N.A.~~ 38'
El Camino Real	El Camino Real North	ECR NE-L	El Camino Real North-East - Low Density	Mixed Use	0.75 (1.10)	20.0 (30.0)	38'	30'
El Camino Real	El Camino Real North	ECR NE	El Camino Real North-East	Mixed Use	1.10 (1.50)	25.0 (40.0)	38' (48' Bonus Height)	~~N.A.~~ 38'
El Camino Real	El Camino Real North	ECR NE-R	El Camino Real North-East - Residential Emphasis	Mixed Use/ Residential	1.10 (1.50)	32.0 (50.0)	38'	~~N.A.~~ 38'
El Camino Real	El Camino Real South	ECR SW	El Camino Real South-West	Mixed Use/ Residential	1.10 (1.50)	25.0 (40.0)	38'	38' (Front Side) 30' (Rear Side)
El Camino Real	El Camino Real South	ECR SE	El Camino Real South-East	Mixed Use/ Residential	1.25 (1.75)	40.0 (60.0)	60	45' 38'
Station		SA W	Station Area West	Retail/ Mixed Use	2.00 (2.25)	50.0 (60.0)	~~60'~~ 48'	~~45'~~ 38'
Station		SA E	Station Area East	Retail/ Mixed Use	1.35 (1.75)	50.0 (60.0)	60'	~~45'~~ 38'
Downtown		DA	Downtown Adjacent	Office/ Residential	0.85 (1.00)	18.5 (25.0)	38'	30'
Downtown		D	Downtown Santa Cruz Avenue	Retail/ Mixed Use	2.00 (2.25)	25.0 (40.0)	38', ~~48' for Parking Plazas 1 & 3~~	30', ~~38' for Parking Plazas 1 & 3~~

*Specific Plan limits the amount of general office allowed and the amount of medical office, based on community concerns, to the following:

Office, General - shall not exceed one half of the base FAR or public benefit bonus FAR

Office, Medical and Dental - shall not exceed one third of the base FAR or public benefit bonus FAR

FAR and DU/acre include both Base and Public Benefit Bonus standards, discussed in more detail in Section E.3.1 "Intensity"

Table E2. *Development Standards and Guidelines*

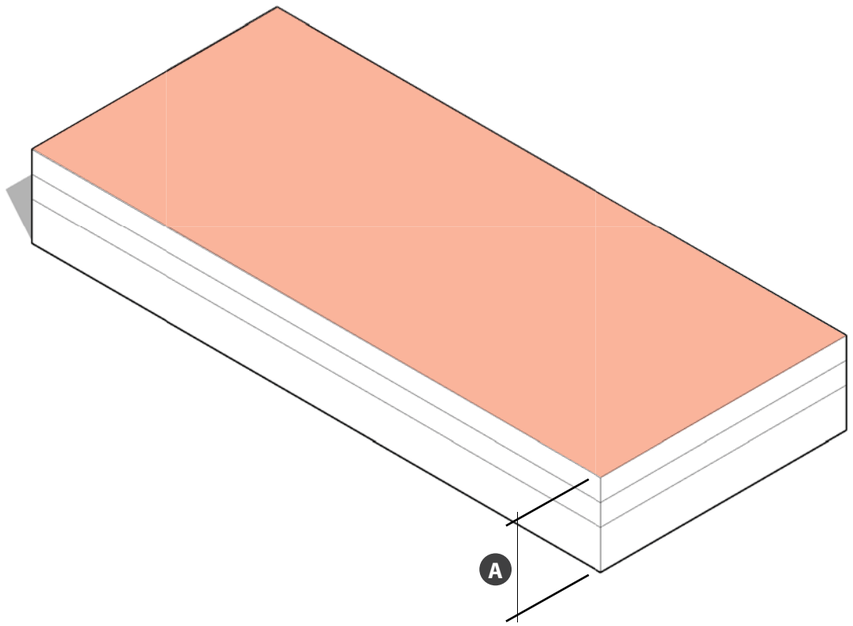

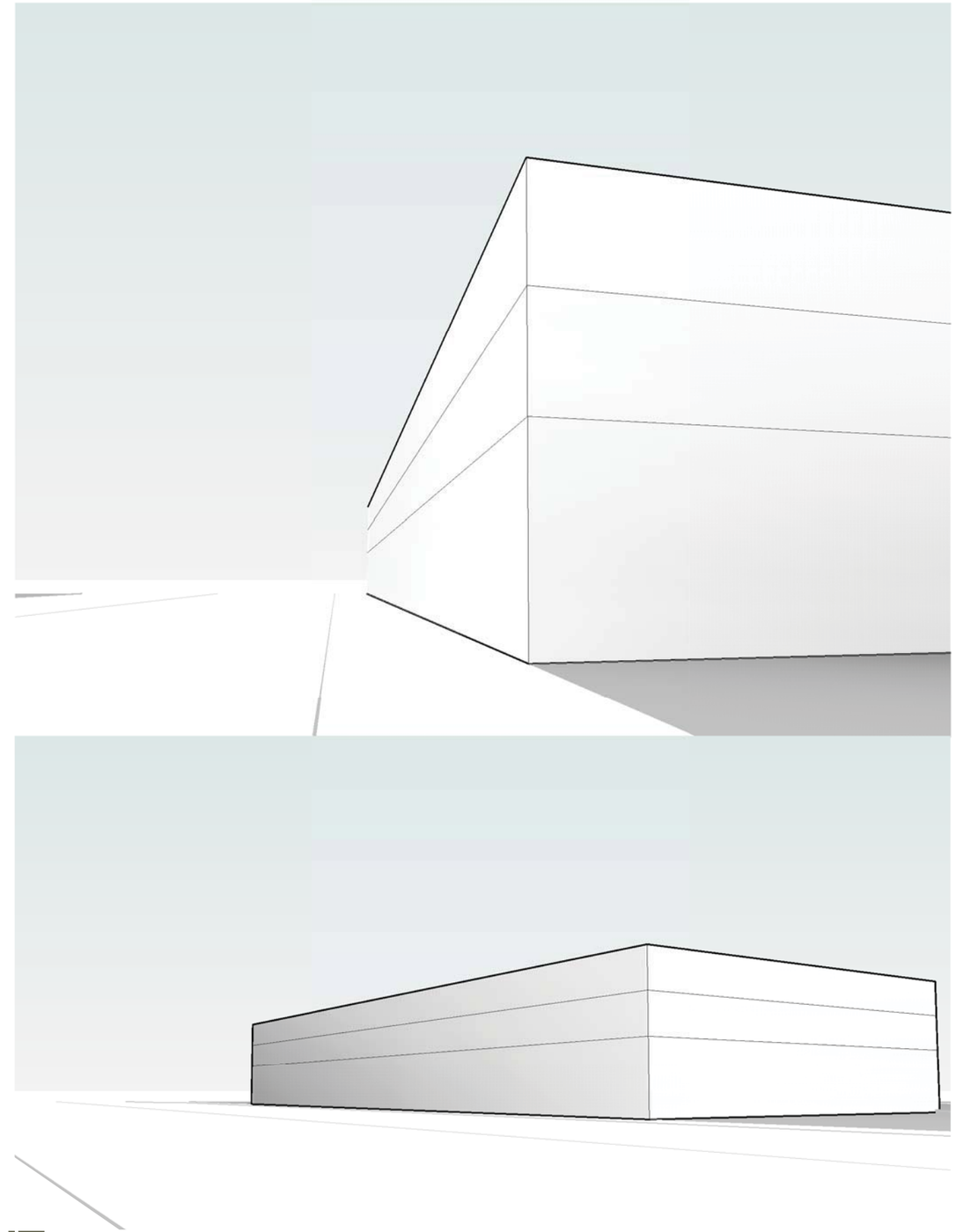

A **Maximum Height:** Building heights shall not exceed the applicable maximum height as indicated in Figure E4: Maximum Building Heights.

Note - Guidelines outlined in red are new or suggested revised guidelines

38’ Height Limit / 38’ Facade Height : MAXIMUM HEIGHT

9 February 2012

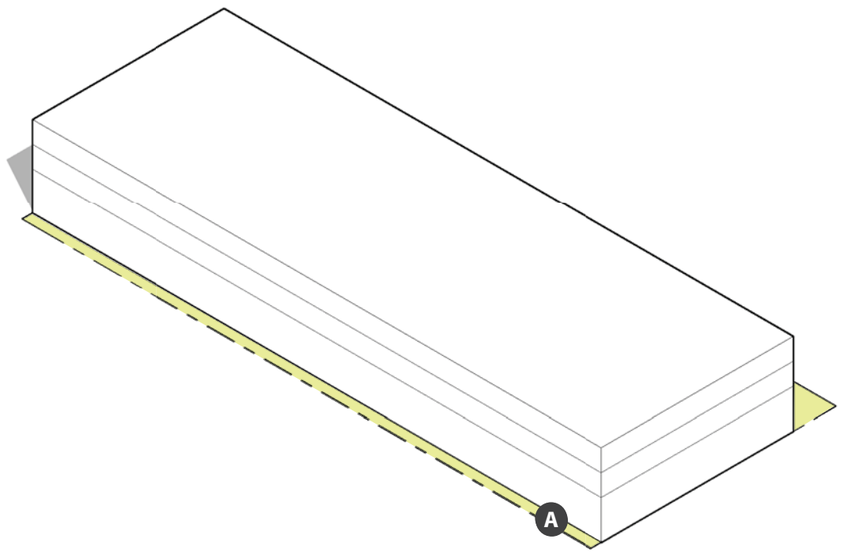

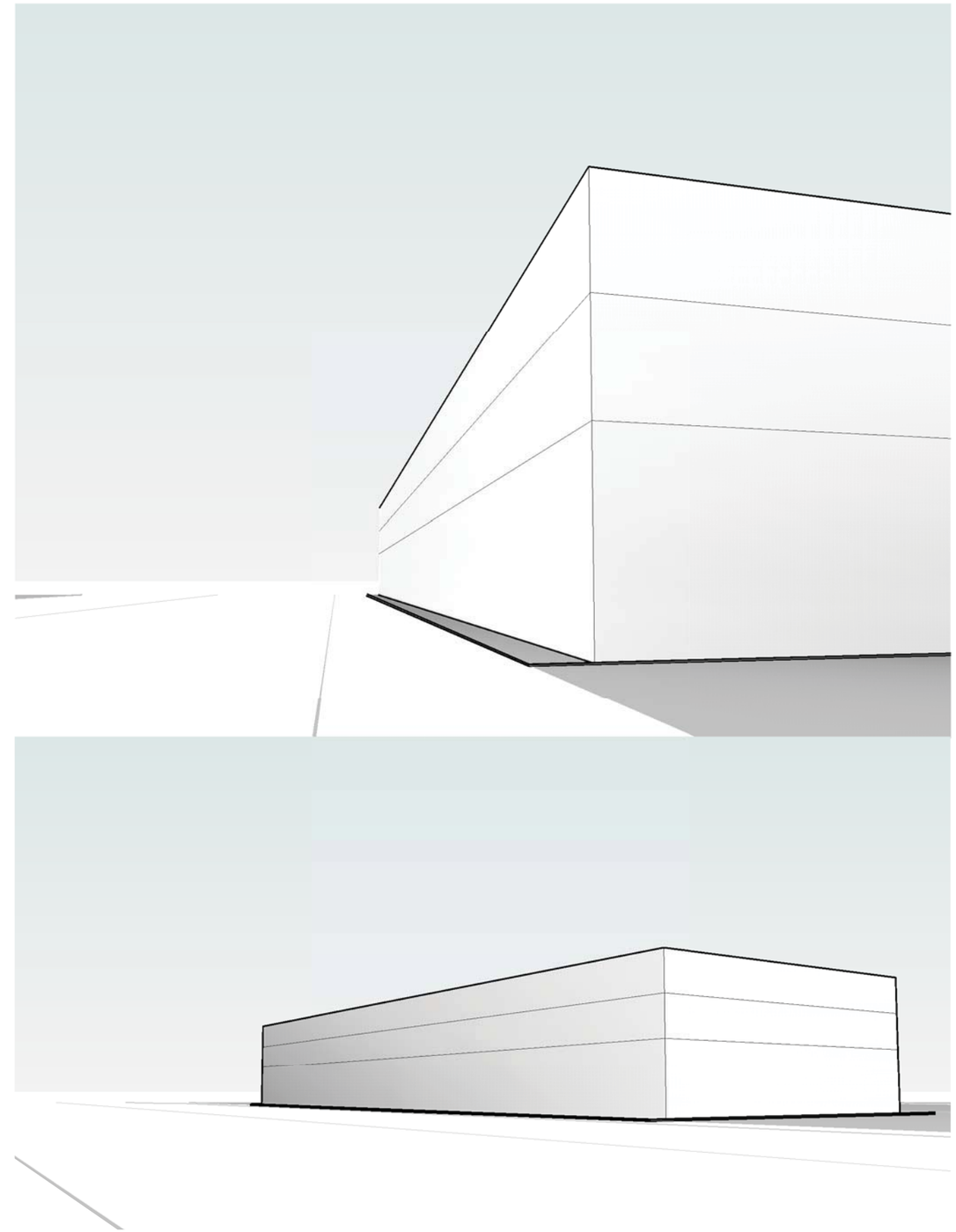

A **Setbacks:** Buildings must setback from the property line as indicated in Figure E7: Building Placement Setback.

Note - Guidelines outlined in red are new or suggested revised guidelines

38’ Height Limit / 38’ Facade Height : SETBACKS

9 February 2012

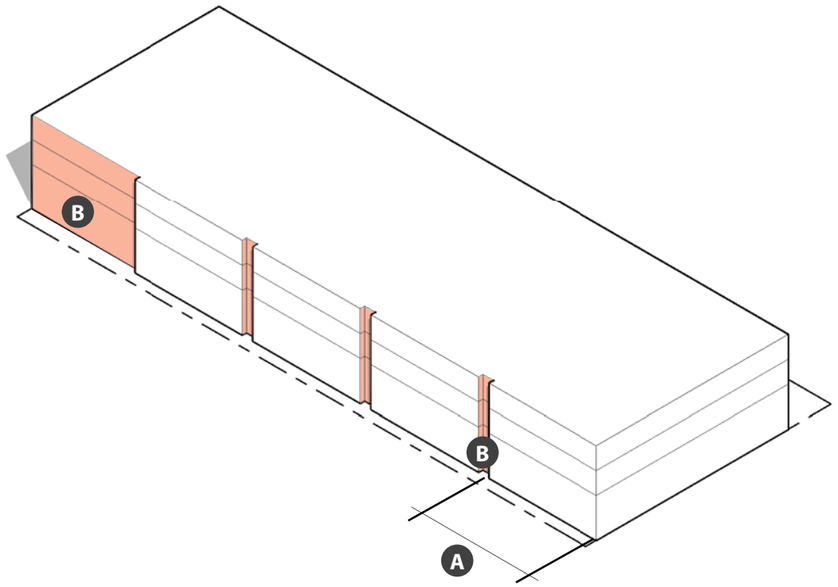

A **Minor Building Facade:** Building Facades facing public rights-of-way or public open spaces may not exceed 50 feet in length without a minor facade modulation.

B **Minor Facade Modulation:** A 2' deep x 5' wide recess or 2' setback of building plane from primary building facade.

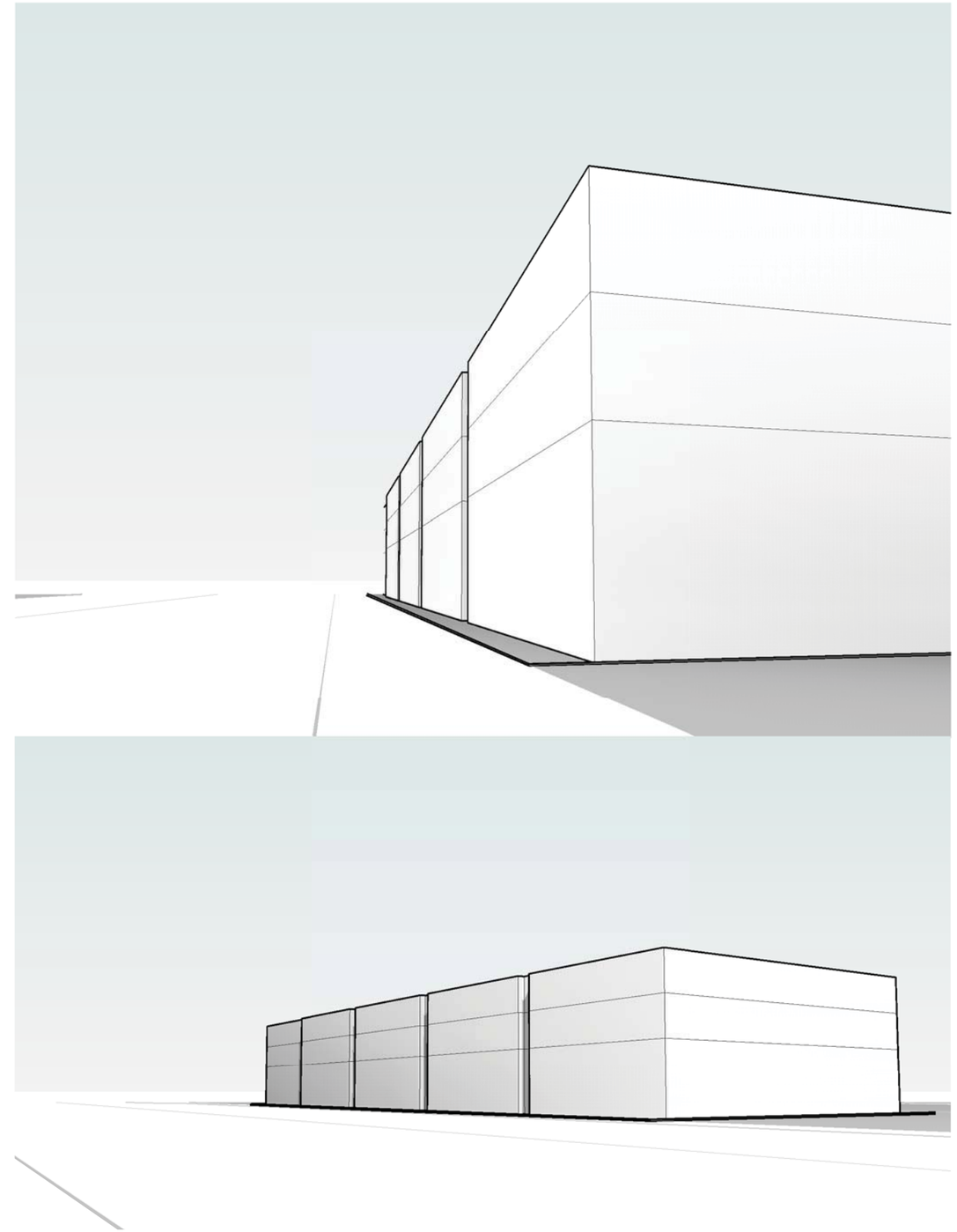

Note - Guidelines outlined in red are new or suggested revised guidelines

38' Height Limit / 38' Facade Height : MODULATION

9 February 2012

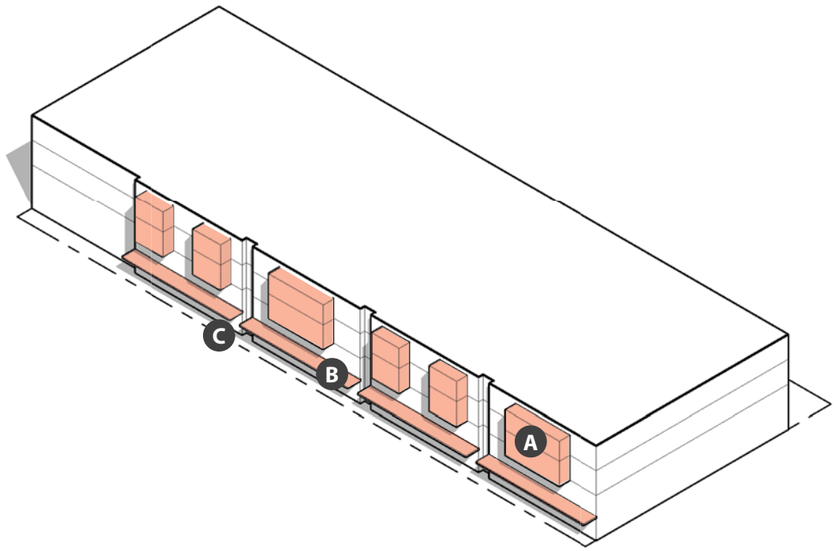

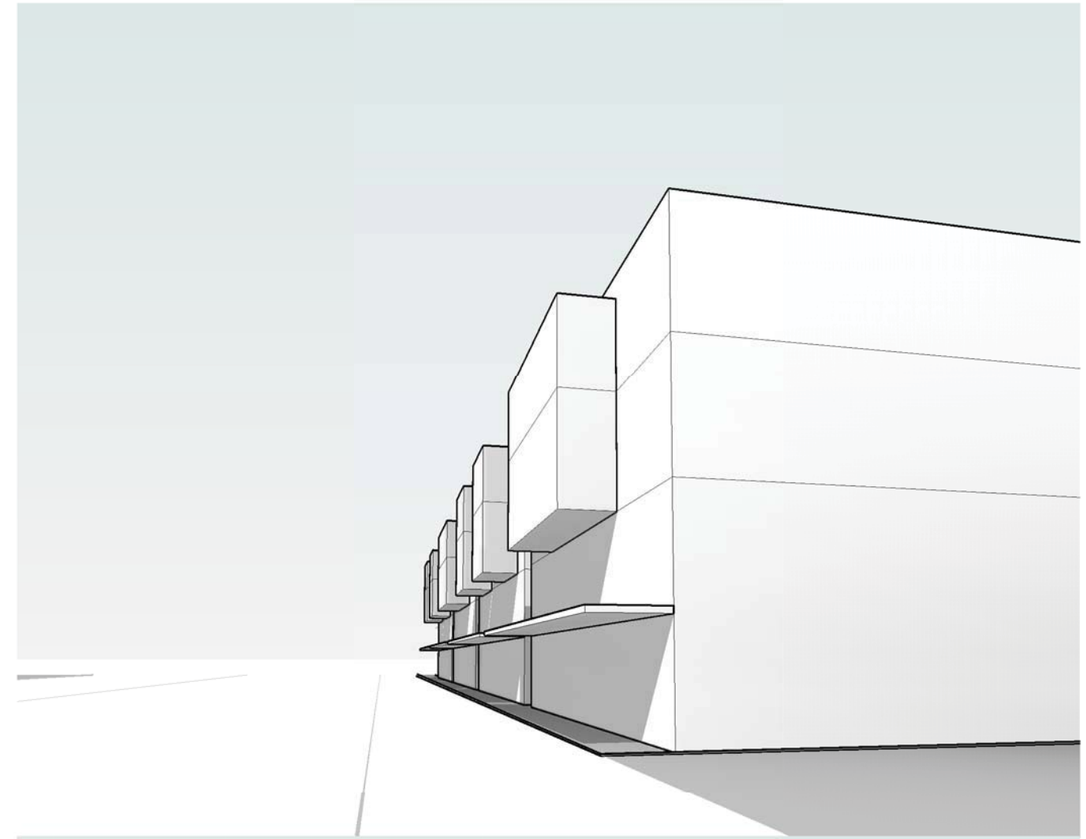

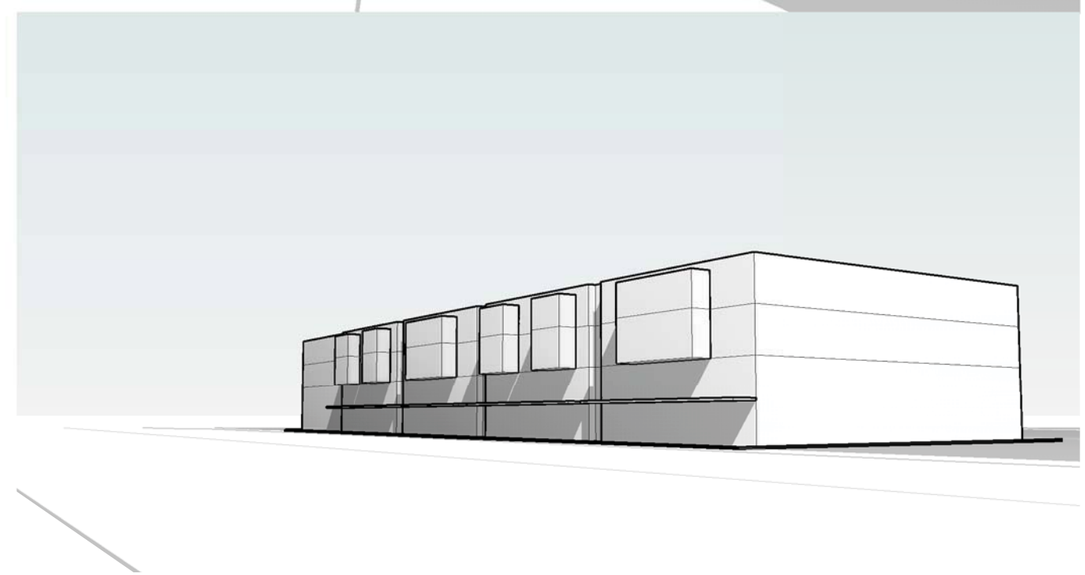

A **Habitable Projections:** Occupied building area at or above the second habitable floor, may project 5' into the setback area and, where feasible, up to 3' into the right-of-way for a length of no greater than 25'.

B **Architectural Projections:** Awnings, canopies, and shading devices may project 6' into the setback area and the right-of-way.

C **Ground Level Elements:** Walls, fences, lighting, elevated private outdoor space, stairs, guardrails, handrails and other similar architectural and landscape elements are permitted in the setback area.

Note - Guidelines outlined in red are new or suggested revised guidelines

38' Height Limit / 38' Facade Height : PROJECTIONS

9 February 2012

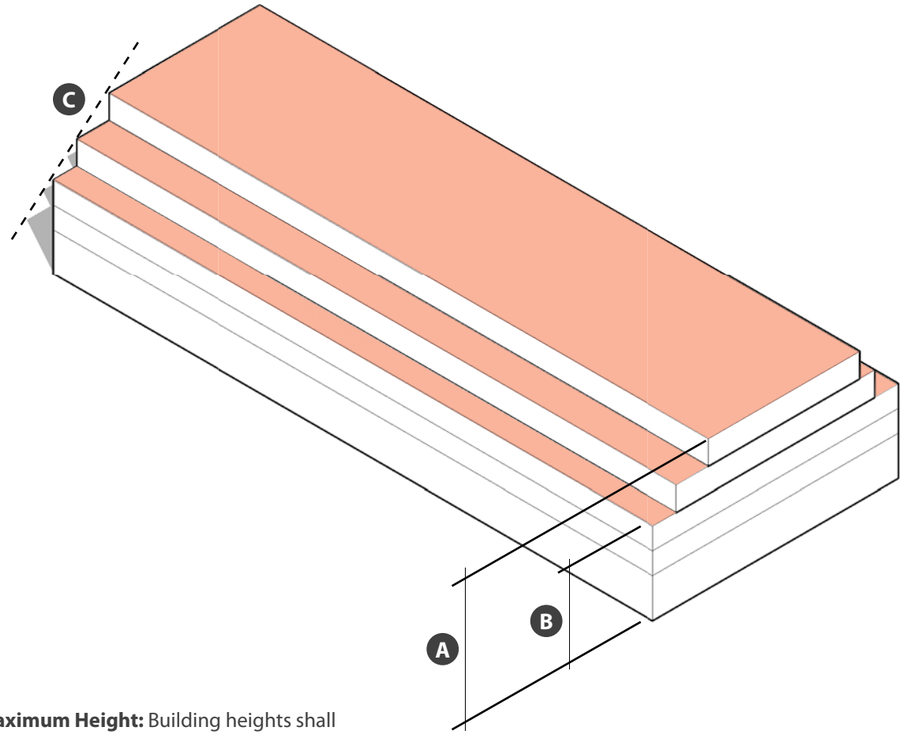

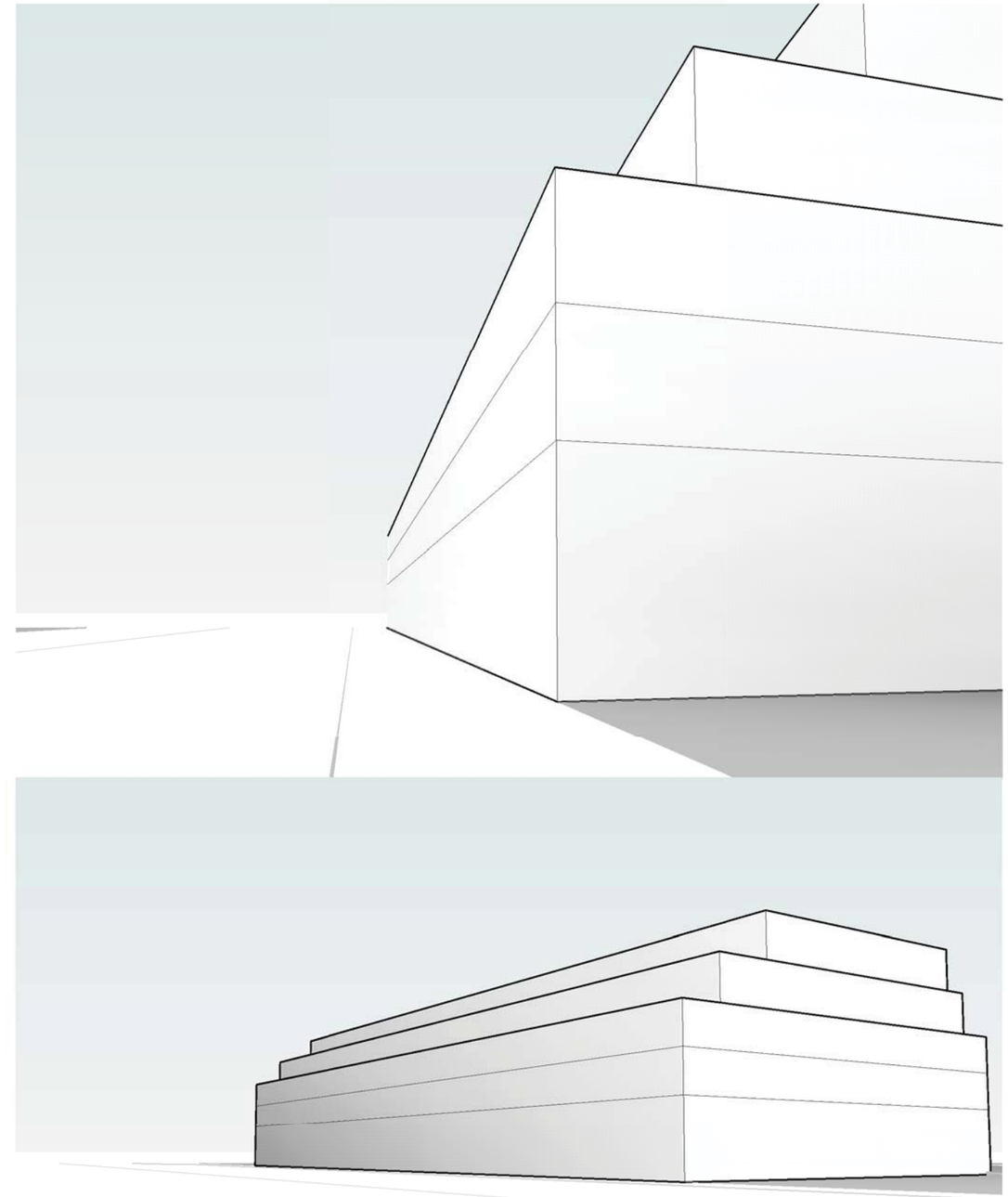

A **Maximum Height:** Building heights shall not exceed the applicable maximum height as indicated in Figure E4: Maximum Building Heights.

B **Facade Height:** Primary building facades facing a public right-of-way or open space shall not exceed the applicable maximum facade height as indicated in Figure E4: Maximum Building Heights.

C **Stepback:** Building massing must stepback at a minimum 45 degree angle from the indicated maximum Facade Height on building facades as specified per district regulations.

Note - Guidelines outlined in red are new or suggested revised guidelines

60’ Height Limit / 38’ Facade Height : MAXIMUM HEIGHT + FACADE HEIGHT

9 February 2012

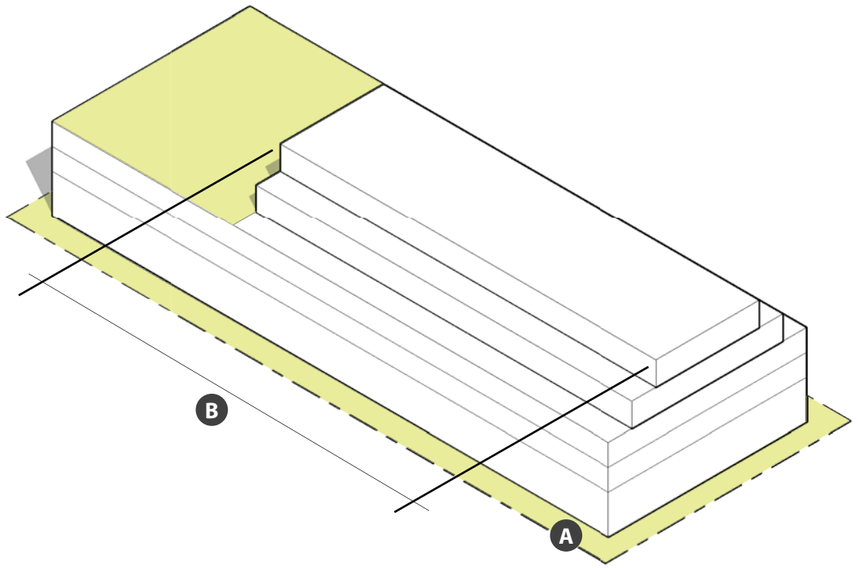

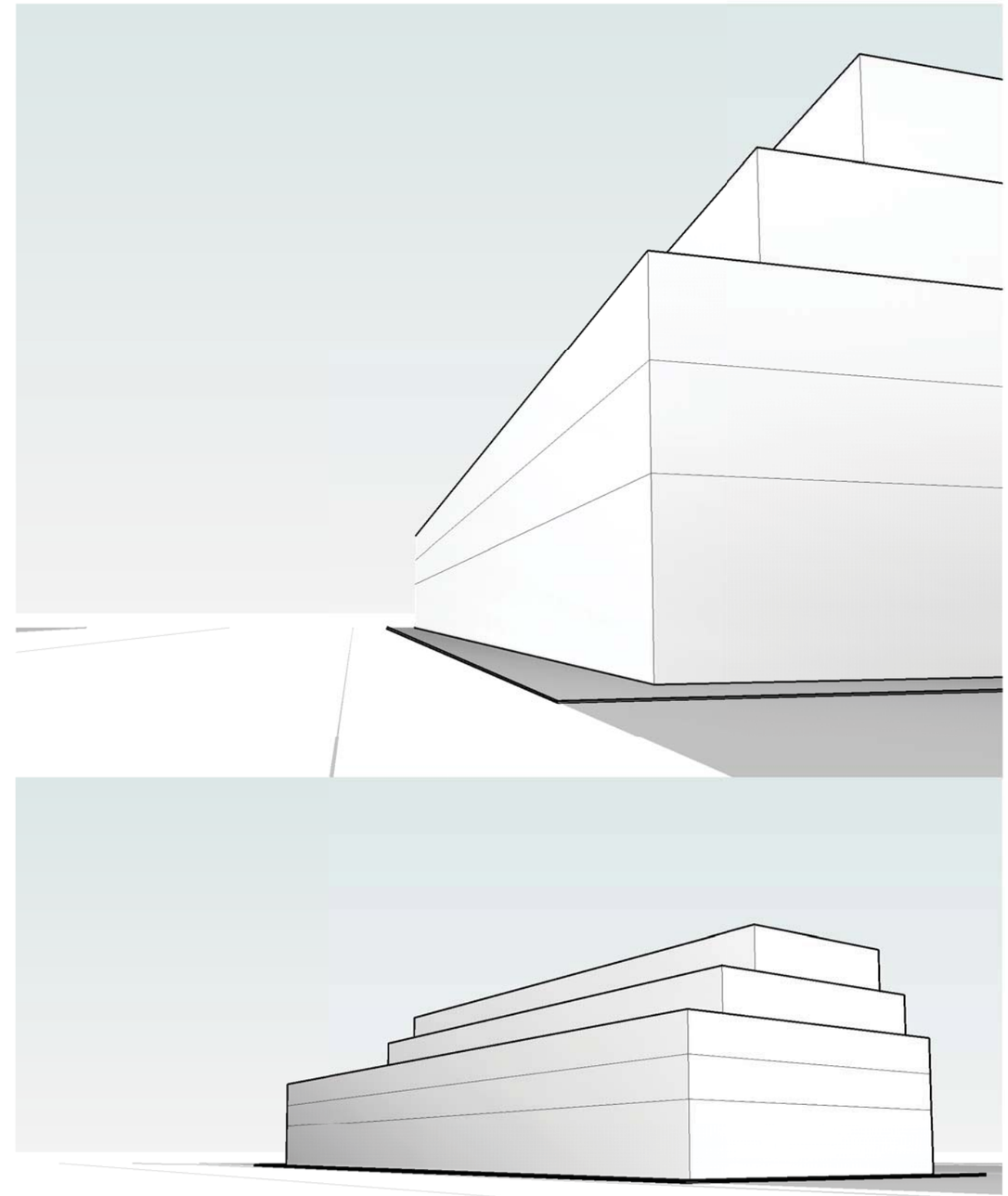

A **Setbacks:** Buildings must setback from the property line as indicated in Figure E7: Building Placement Setback.

B **Maximum Continuous Length of Floors:** The maximum continuous length of floors above the required facade height shall be no greater than175 ' for all portions of the building.

Note - Guidelines outlined in red are new or suggested revised guidelines

60' Height Limit / 38' Facade Height : SETBACKS + BULK REDUCTION

9 February 2012

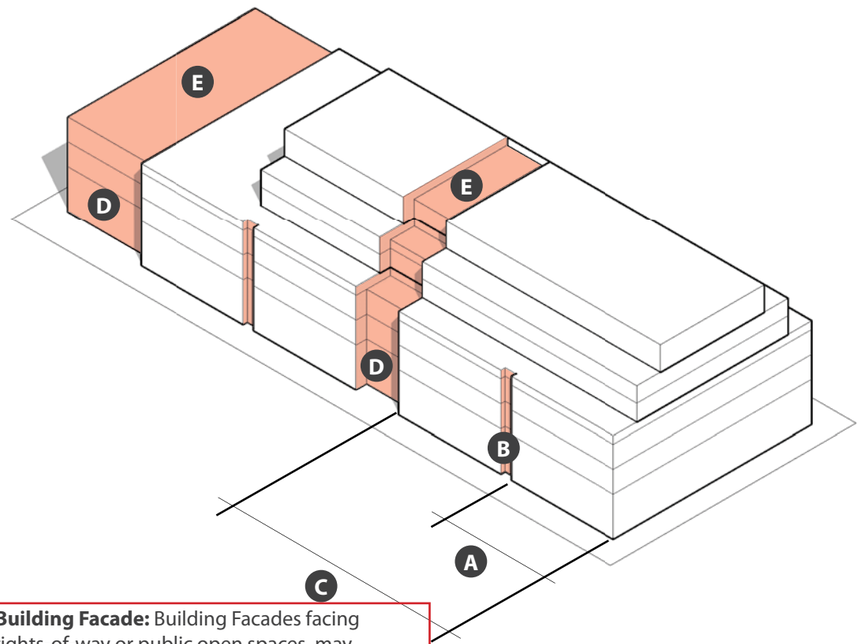

A **Minor Building Facade:** Building Facades facing public rights-of-way or public open spaces may not exceed 50 feet in length without a minor facade modulation.

B **Minor Facade Modulation:** A 2' deep x 5' wide recess or 2' setback of building plane from primary building facade.

C **Major Building Facade:** Building Facades facing public rights-of-way or public open spaces may not exceed 100 feet in length without a major facade modulation.

D **Major Facade Modulation:** A 6' deep x 20' wide recess or 6' setback of building plane from primary building facade for the entire height of the building, in conjunction with a major change in fenestration pattern and/or material and/or color.

E **Height Modulation:** A minimum 4' change in building height is required in conjunction with the required major facade modulation.

Note - Guidelines outlined in red are new or suggested revised guidelines

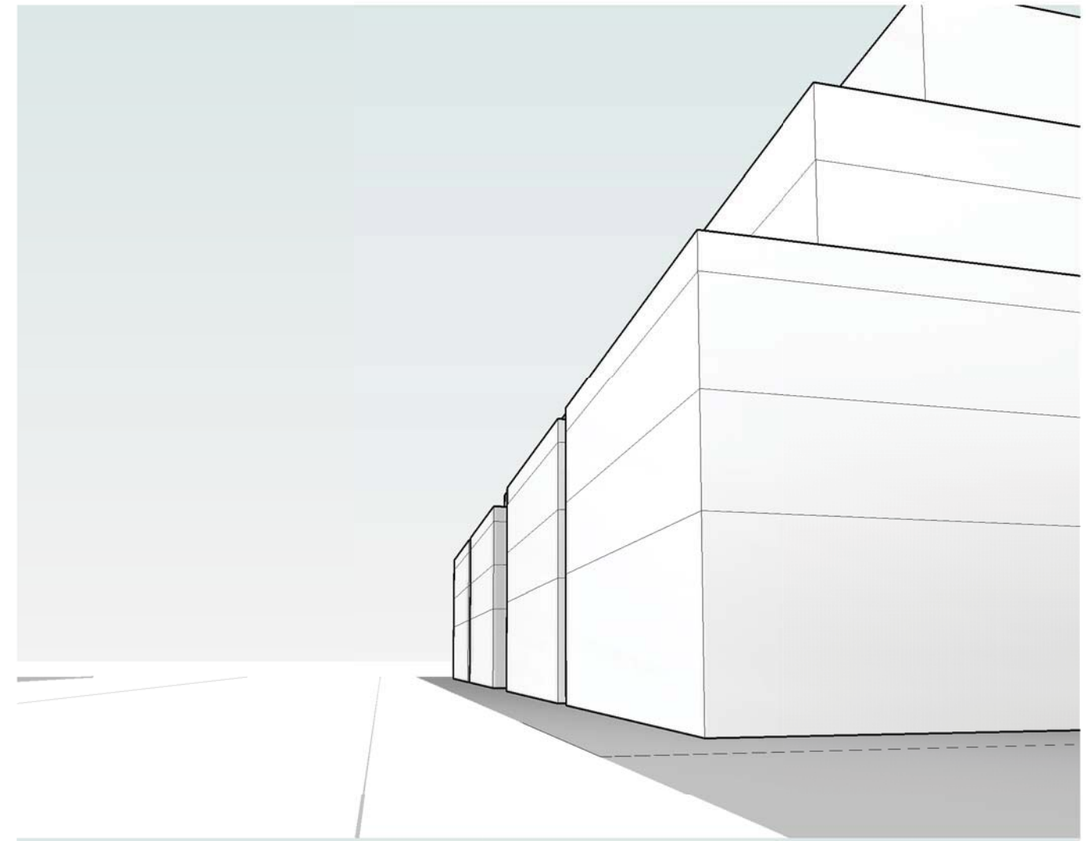

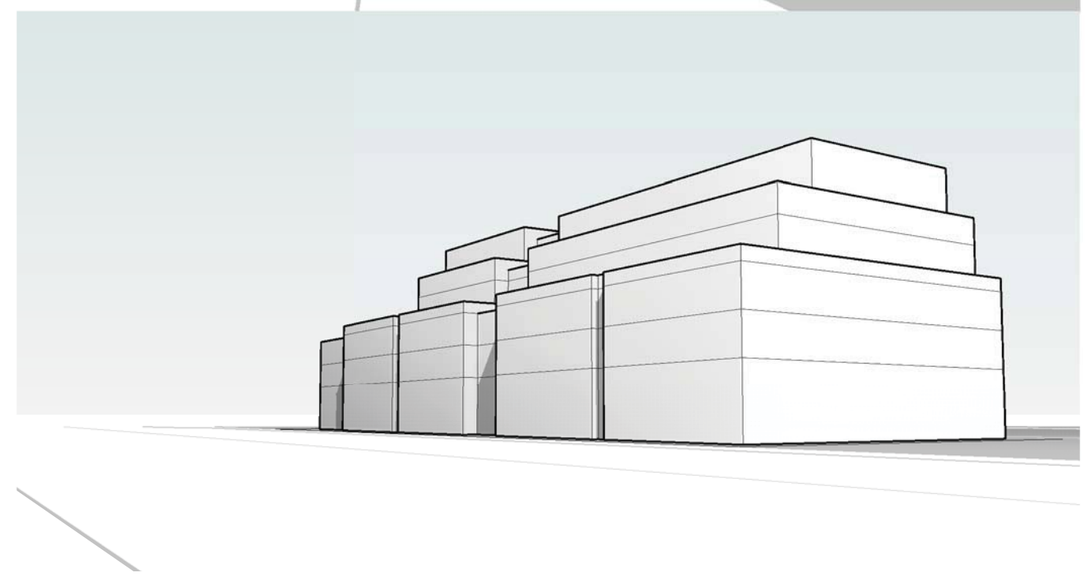

60' Height Limit / 38' Facade Height : MODULATION

9 February 2012

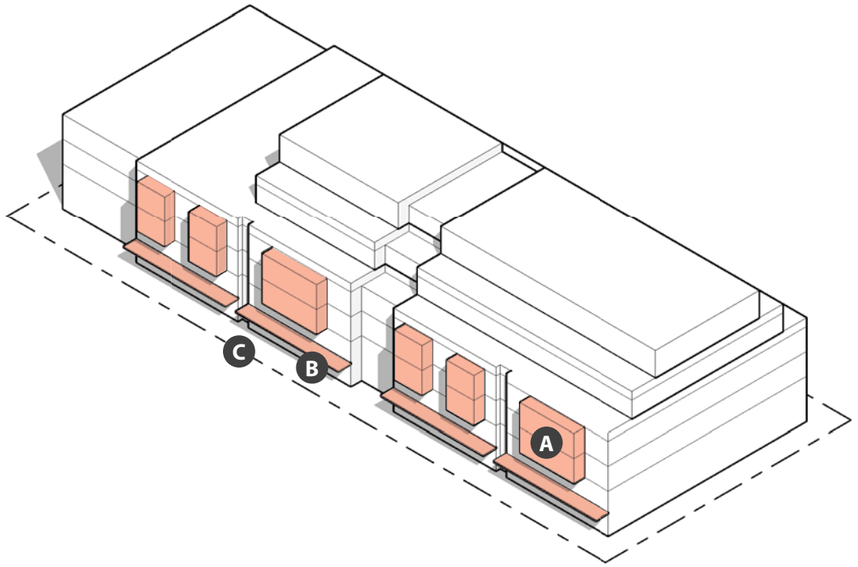

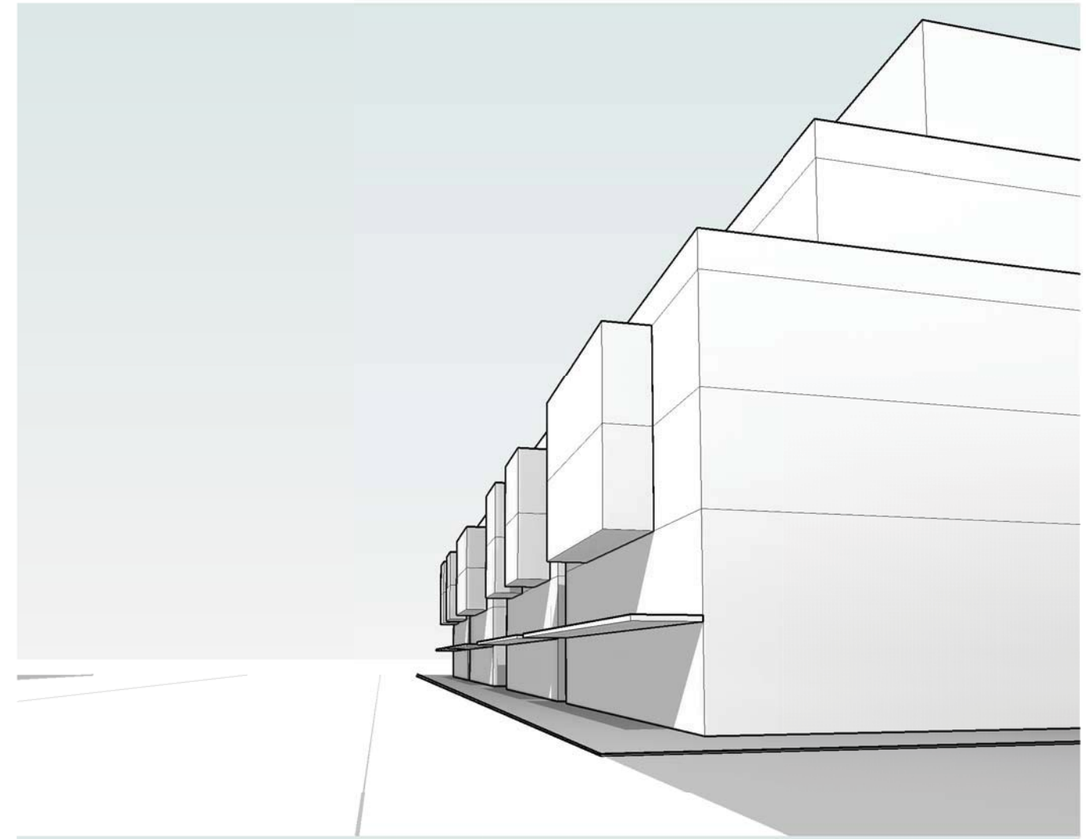

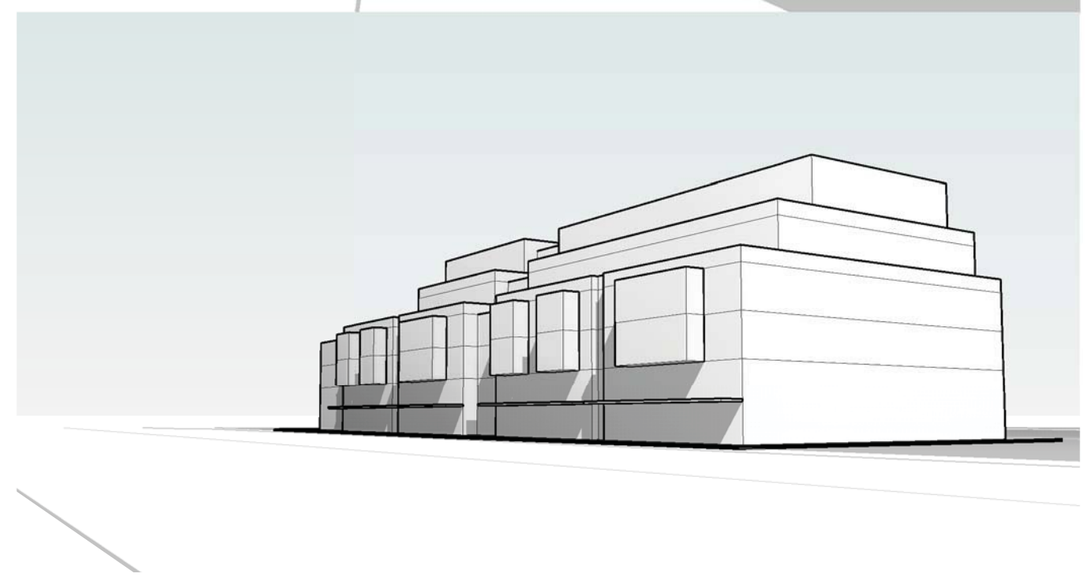

A **Habitable Projections:** Occupied building area at or above the second habitable floor, may project 5' into the setback area and, where feasible, up to 3' into the right-of-way for a length of no greater than 25'.

B **Architectural Projections:** Awnings, canopies, and shading devices may project 6' into the setback area and the right-of-way.

C **Ground Level Elements:** Walls, fences, lighting, elevated private outdoor space, stairs, guardrails, handrails and other similar architectural and landscape elements are permitted in the setback area.

Note - Guidelines outlined in red are new or suggested revised guidelines

60' Height Limit / 38' Facade Height : PROJECTIONS

9 February 2012

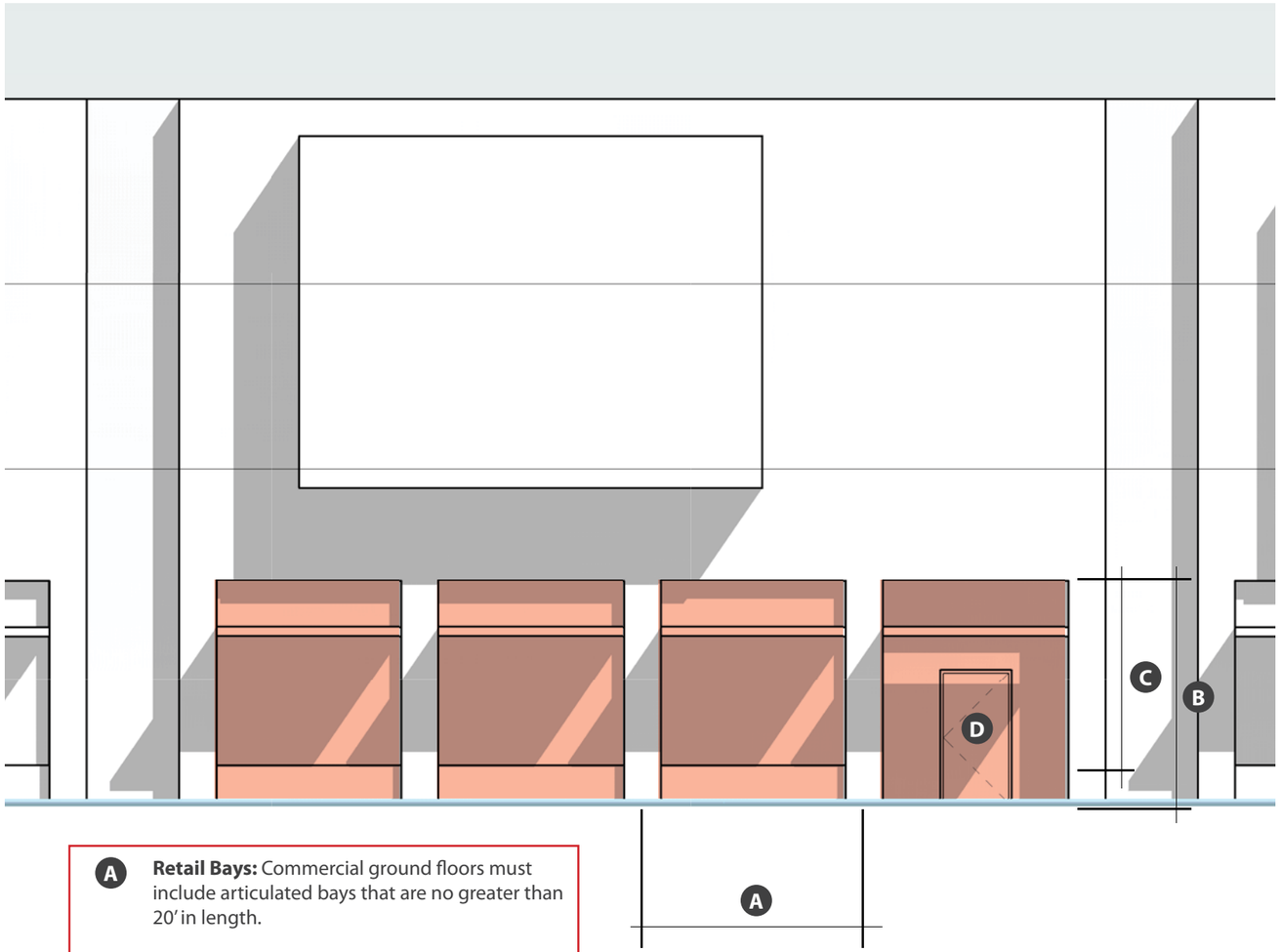

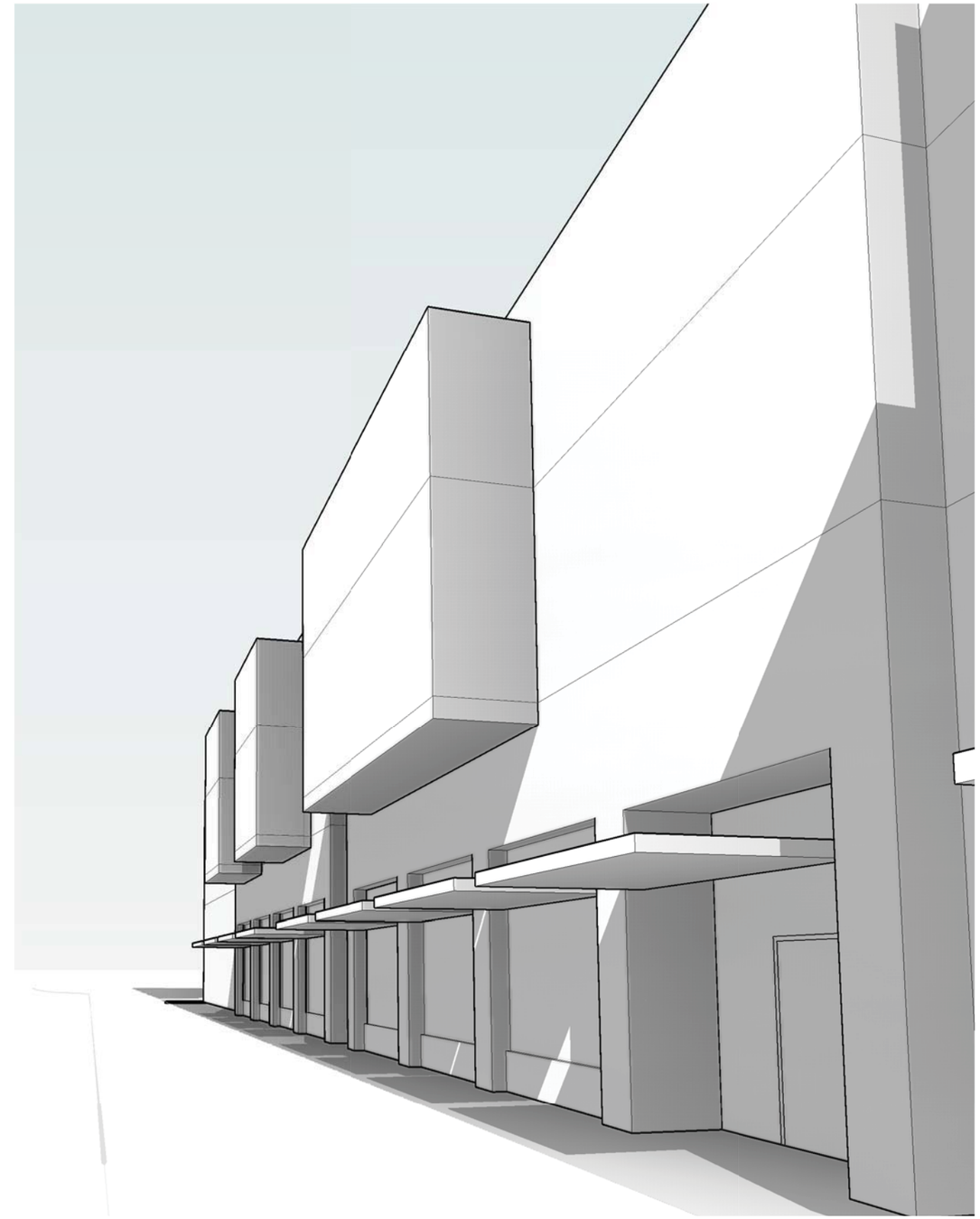

A **Retail Bays:** Commercial ground floors must include articulated bays that are no greater than 20' in length.

B **Floor-to-Floor Heights:** Commercial ground floors must have a minimum floor-to-floor height of 15' with a minimum 13' ceiling height.

C **Glazing:** At least 50% of the ground floor facade plane shall be devoted to transparent windows and doors.

D **Recessed Windows & Doors:** Windows shall be recessed from the primary building facade a minimum of 6". Main entry doors may be recessed up to a maximum of 6' from the primary building facade.

Note - Guidelines outlined in red are new or suggested revised guidelines

Building Base : COMMERCIAL

9 February 2012

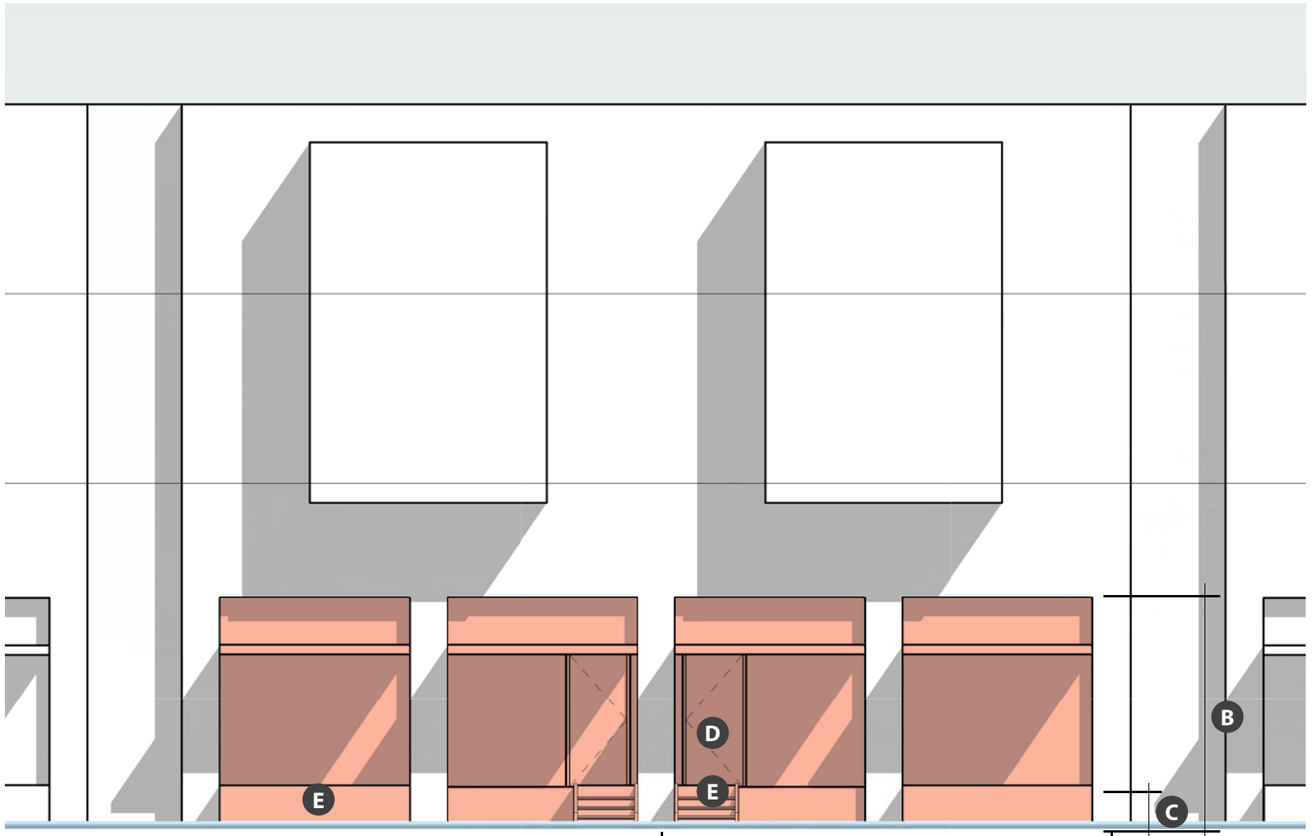

A **Fine Grain Residential:** Ground floor residential unit entries must occur at a maximum average of 1 door per 35 linear feet.

B **Floor-to-Floor Heights:** The second habitable floor of all residential buildings must be a minimum height of 15' above sidewalk grade.

C **Raised Entries:** A 24" to 48" elevation change must be provided between the first habitable floor of ground floor residential units and the sidewalk grade.

D **Recessed Entries:** Residential entries may be recessed up to a maximum of 6' from the primary building facade.

E **Transition Zone:** Building elements such as stairs, private yards, porches, planters, low walls are encouraged along the base of residential buildings.

Note - Guidelines outlined in red are new or suggested revised guidelines

Building Base : RESIDENTIAL

9 February 2012

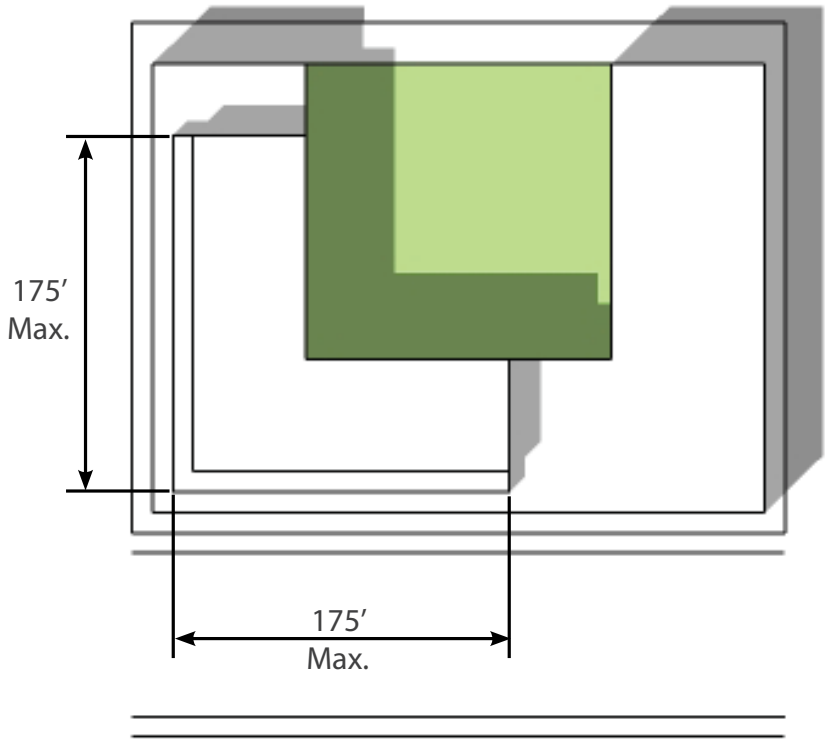

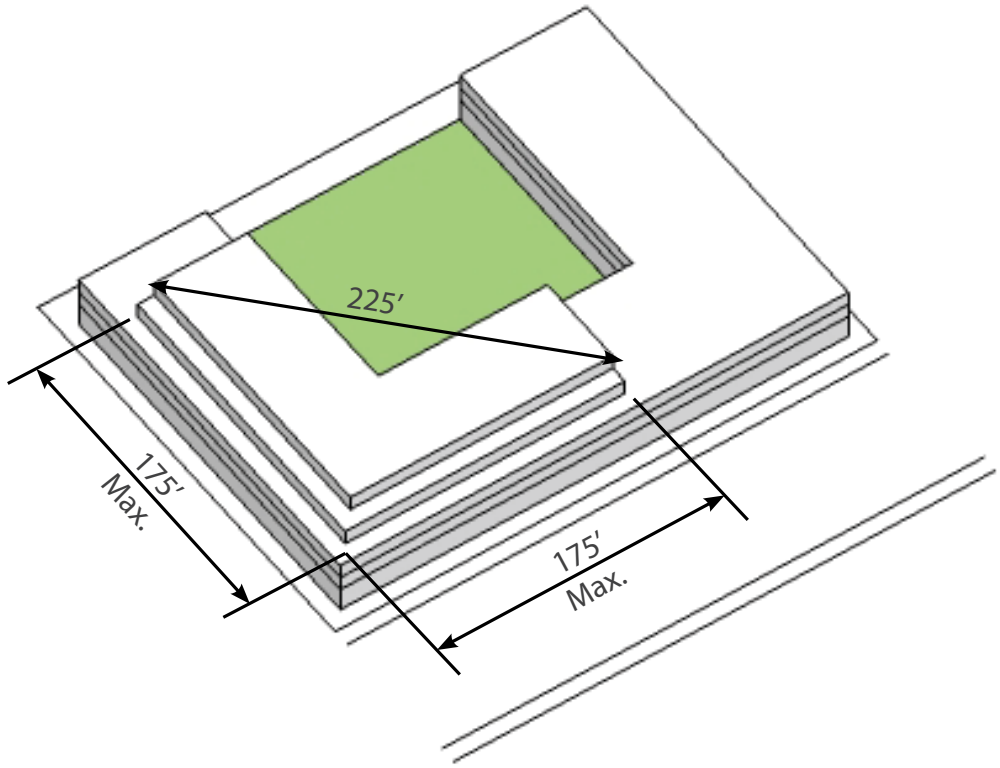

Bulk Control Study (for Portions of Buildings only above 38' Height)

10 February 2012

El Camino Real/Downtown Specific Plan
City of Menlo Park

PERKINS + WILL

ATTACHMENT B/C.v

BUILDING FACADE ARTICULATION TO INCREASE THE ARCHITECTURAL INTEREST

Apparent Building facade ≤ 50′

50′ < Apparent Building facade ≤ 100′

Apparent Building facade ≤ 50′

50′ < Apparent Building facade ≤ 100′

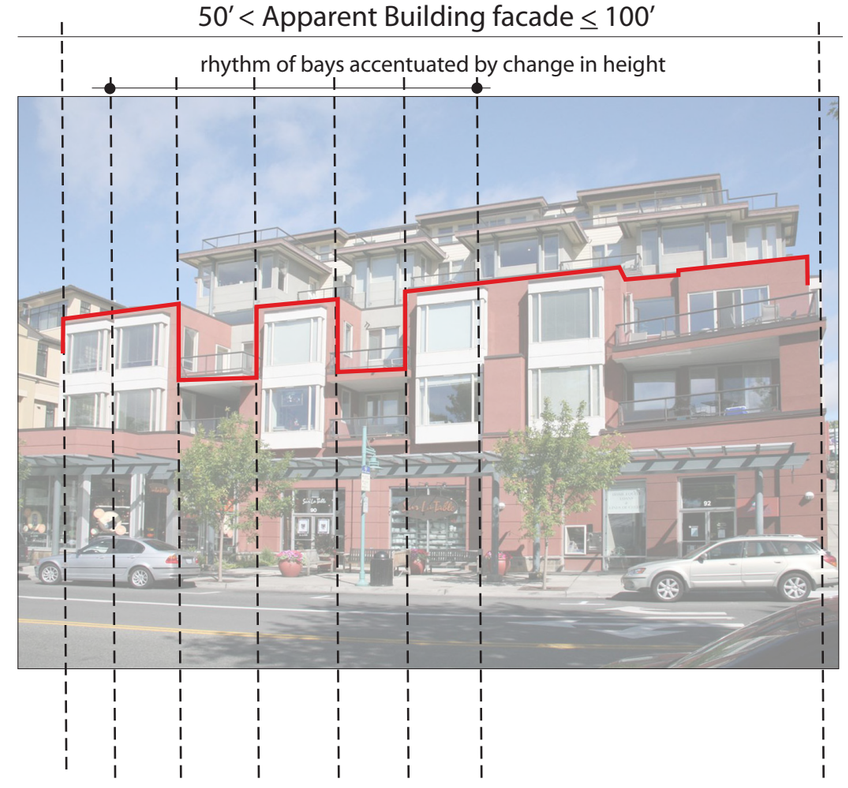

9 February 2012