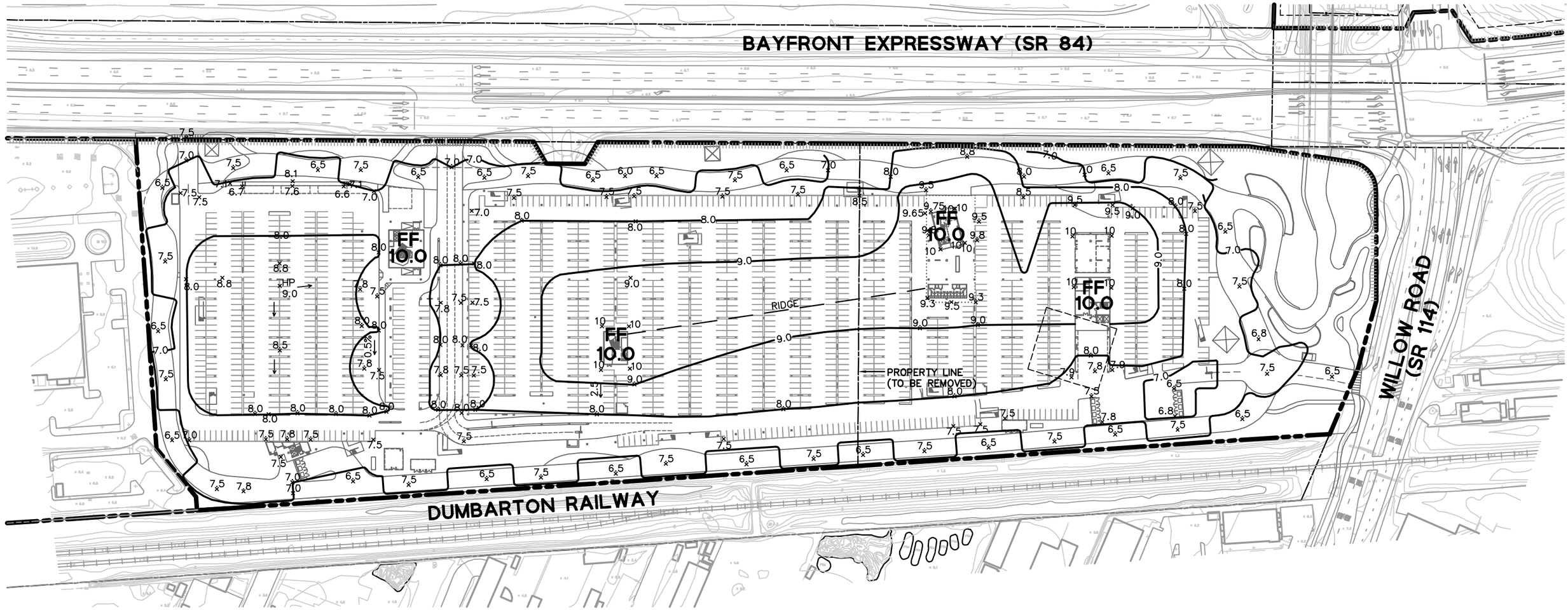

FLOOD ZONE

FEMA ZONE: AE7 (PER FLOOD INSURANCE RATE MAP DATED 4/21/99, COMMUNITY PANEL NUMBER 060321 0005 D)
BASE FLOOD ELEVATION IS 7.5 FEET*
*PER FLOOD INSURANCE STUDY BY FEMA, APRIL 21, 1999 (NGVD29)

NOTES

1. ELEVATIONS SHOWN ON PROPOSED GRADING EXHIBIT ARE BASED ON NATIONAL GEODETIC VERTICAL DATUM OF 1929 (NGVD 29).
2. IMPORT SOIL FOR SITE GRADING IS APPROXIMATELY 35,000 CY.
3. IMPORT SOIL FOR GREEN ROOF IS APPROXIMATELY 18,900 CY.

LEGEND

- PROPERTY LINE
- EASEMENT
- BAYFRONT EXPRESSWAY (SR 84) RIGHT-OF-WAY
- NON-ACCESS AREA (CALTRANS)

0 25' 75' 150'

NORTH

facebook west campus

312 & 313 CONSTITUTION DR.
MENLO PARK, CALIFORNIA

WI.1: PROPOSED GRADING PLAN

SCALE: 1"=75'
11X17 SCALE IS 1"=150'

DECEMBER 3 2012

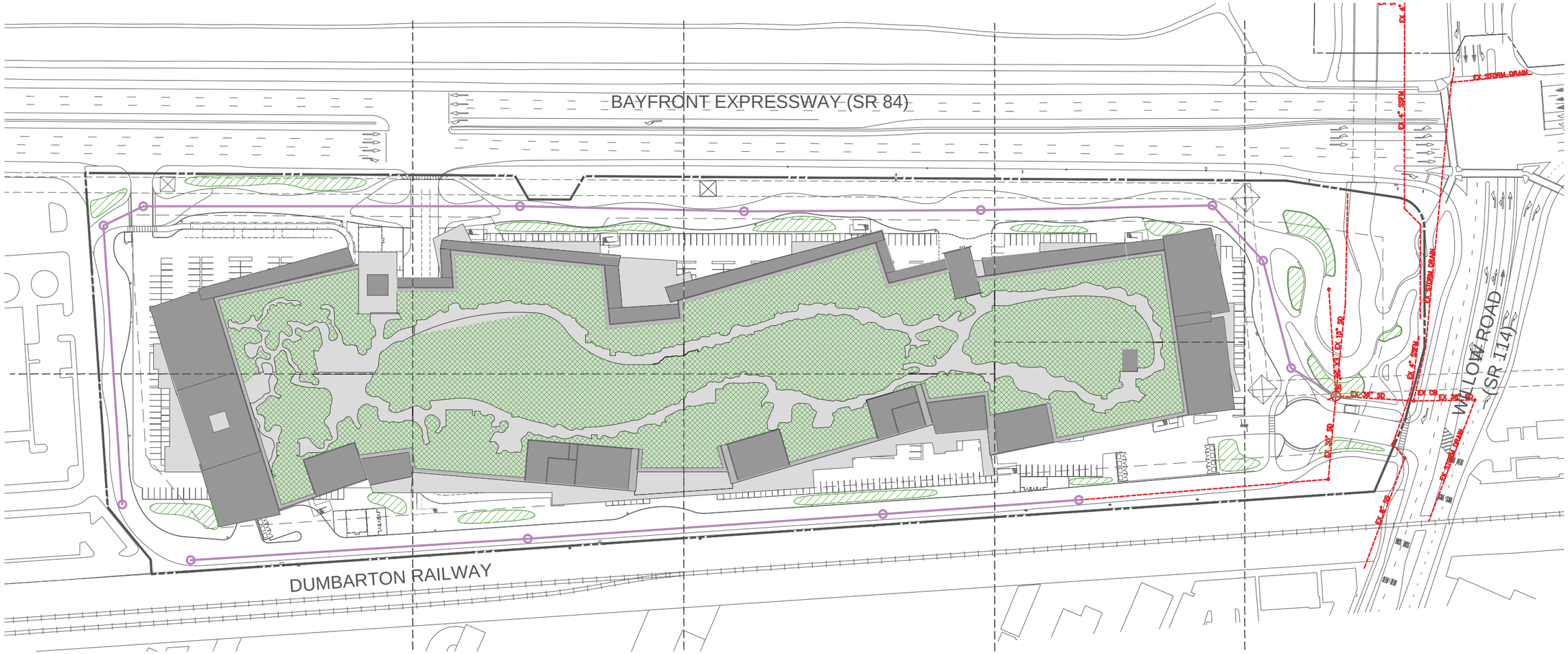

Legend

- Treatment Area
- Proposed Stormdrain
- Existing Stormdrain

0 25' 75' 150'

NORTH

facebook west campus

312 & 313 CONSTITUTION DR.
MENLO PARK, CALIFORNIA

WI.2: PROPOSED STORM DRAINAGE SYSTEM

SCALE: 1"=75'
11X17 SCALE IS 1"=150'

DECEMBER 3, 2012

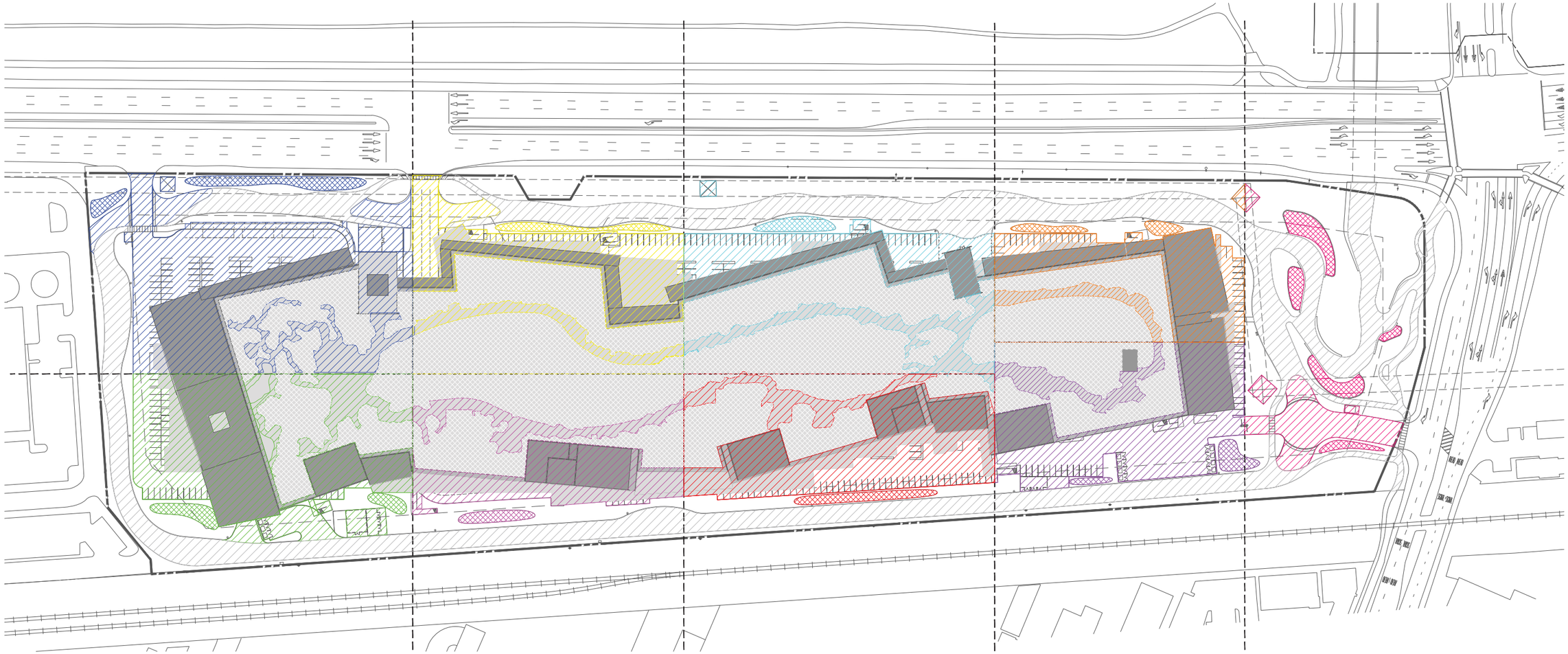

Legend

Catchment Area Identifier

A–1
A–2
B–1
B–2
C–1
C–2
D–1
D–2
E–1

Treatment Area Identifier

A–1
A–2
B–1
B–2
C–1
C–2
D–1
D–2
E–1

Pervious Pavement

NOTE: Refer to Tables 3 & 4 in Hydrology Report for tabulation of treatment areas.

0 25' 75' 150'

NORTH

facebook west campus

312 & 313 CONSTITUTION DR.
MENLO PARK, CALIFORNIA

WI.3: PROPOSED STORMWATER QUALITY PLAN

SCALE: 1"=75'
11X17 SCALE IS 1"=150'

DECEMBER 3, 2012

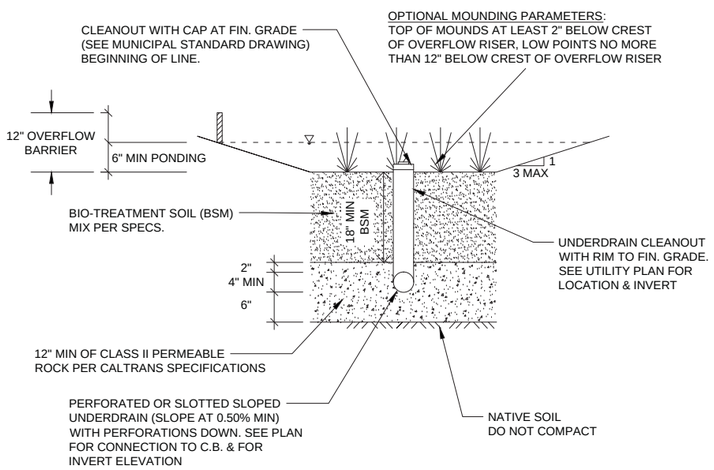

CROSS-SECTION, BIORETENTION

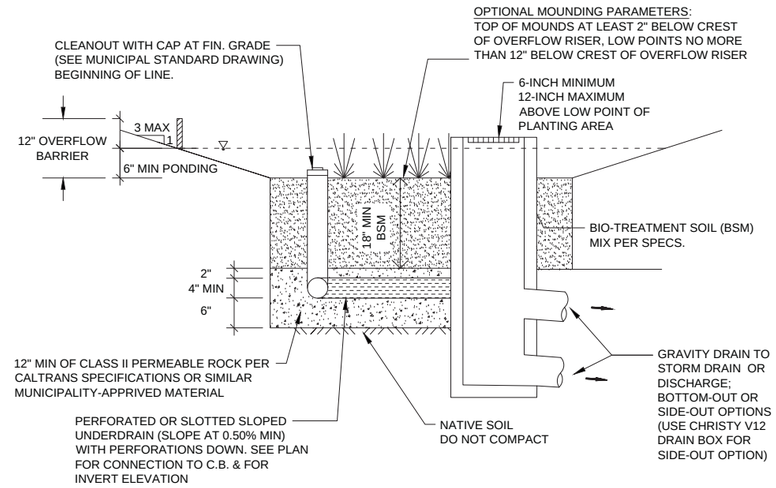

CROSS-SECTION, BIORETENTION (SIDE VIEW)

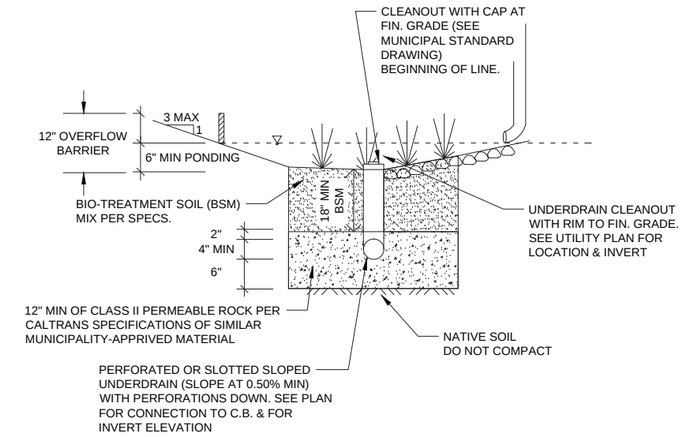

BIORETENTION AREA IN LANDSCAPING TO TREAT RUNOFF FROM RAINWATER LEADERS

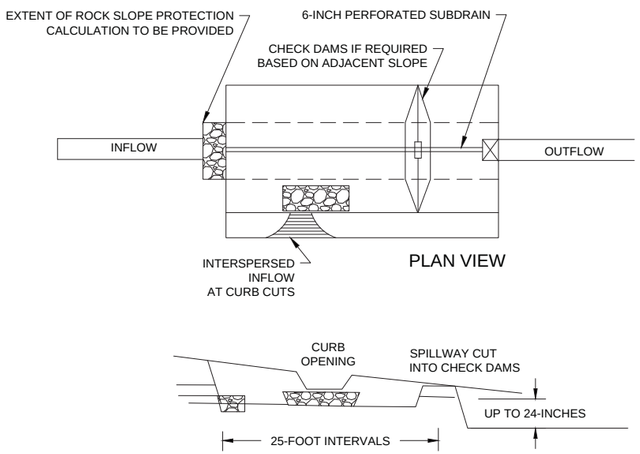

CHECK DAM (PLAN VIEW AND PROFILE) FOR INSTALLING A SERIES OF LINEAR BIORETENTION CELLS IN SLOPED AREA

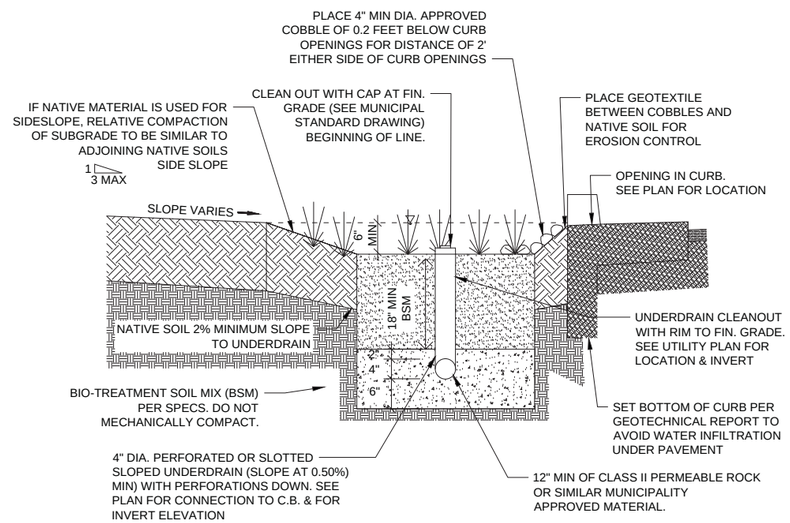

CROSS-SECTION OF BIORETENTION AREA SHOWING INLET FROM PAVEMENT

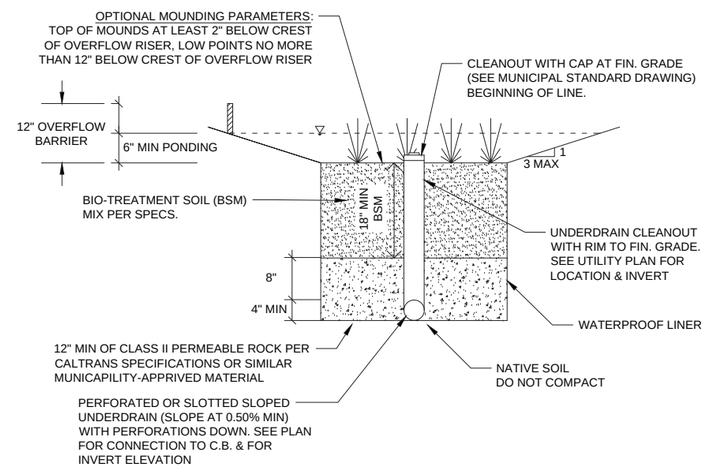

CROSS-SECTION OF LINED BIORETENTION AREA, FOR LOCATIONS WHERE INFILTRATION IS PRECLUDED

NOTE:
SURFACE AREA OF THE BIOTREATMENT SOIL SHALL EQUAL 4% OF THE AREA OF THE SITE THAT DRAINS TO THE TREATMENT MEASURE. IN THE EVENT OF THE 100-YEAR STORM, AVAILABLE PONDING IN THE BIORETENTION AREAS IS MAXIMIZED TO CONTAIN STORMWATER FLOWS.

facebook west campus

312 & 313 CONSTITUTION DR.
MENLO PARK, CALIFORNIA

WI.3.1: TREATMENT AREA SECTION

NOT TO SCALE

DECEMBER 3, 2012

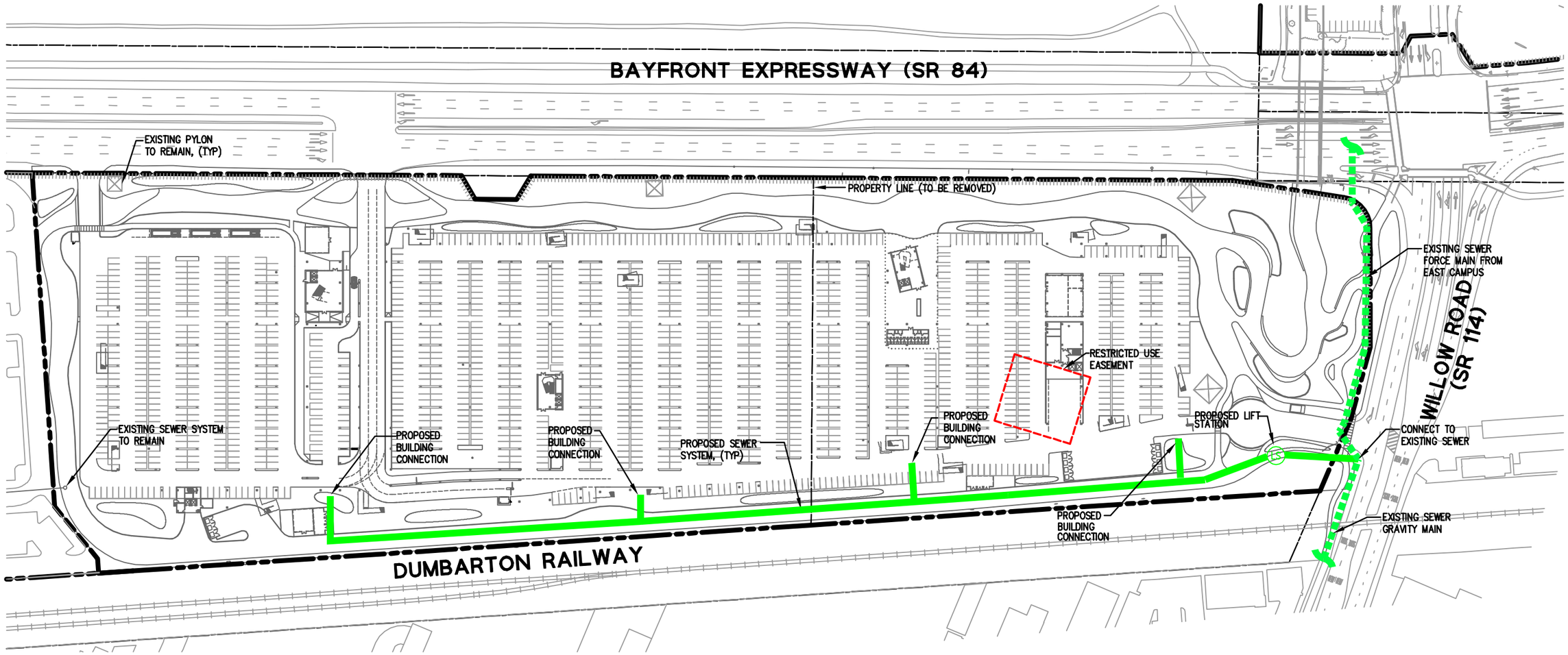

LEGEND & ABBREVIATIONS

- PROPOSED SANITARY SEWER
- EXISTING SEWER FORCE MAIN
- (TYP) TYPICAL
- PROPERTY LINE
- EASEMENT
- BAYFRONT EXPRESSWAY (SR 84) RIGHT-OF-WAY
- NON-ACCESS AREA (CALTRANS)

NOTES

1. UTILITY LAYOUT IS CONCEPTUAL AND INFORMATIVE. UTILITY LAYOUT IS SUBJECT TO CHANGE. FINAL UTILITY ENGINEERING DESIGN WILL BE PERFORMED AT THE TIME OF PROJECT PLAN CONSTRUCTION.
2. SEWER PROVIDER IS WEST BAY SANITARY DISTRICT.

0 25' 75' 150'

NORTH

facebook west campus

312 & 313 CONSTITUTION DR.
MENLO PARK, CALIFORNIA

WI.4: PROPOSED SANITARY SEWER SYSTEM

SCALE: 1"=75'
11X17 SCALE IS 1"=150'

DECEMBER 3 2012

BAYFRONT EXPRESSWAY (SR 84)

PRIVATE EXISTING 12-INCH FIRE SERVICE

EXISTING PYLON TO REMAIN, TYP

PROPOSED FIRE WATER SYSTEM, (TYP)

PROPERTY LINE (TO BE REMOVED)

CONNECT TO PRIVATE EXISTING 12-INCH FIRE SERVICE

EXISTING 12-INCH WATER, (TYP)

FIRE HYDRANT (TYP)

FDC

RESTRICTED USE EASEMENT

PROPOSED BUILDING CONNECTION

CONNECT TO EXISTING 12-INCH WATER

WILLOW ROAD (SR 114)

PROPOSED FIRE WATER SYSTEM, (TYP)

DUMBARTON RAILWAY

FIRE HYDRANT (TYP)

LEGEND & ABBREVIATIONS

	NEW FIRE HYDRANT
	NEW FDC
FDC	FIRE DEPARTMENT CONNECTION
(TYP)	TYPICAL
	EXISTING WATER LINE
	PRIVATE EXISTING 12-INCH FIRE SERVICE
	PROPOSED FIRE WATER LINE
	PROPOSED DOMESTIC WATER LINE
	POTENTIAL SUPPLEMENTAL FIRE WATER LINE
	PROPERTY LINE
	EASEMENT
	BAYFRONT EXPRESSWAY (SR 84) RIGHT-OF-WAY
	NON-ACCESS AREA (CALTRANS)

NOTES:
1. IRRIGATION SYSTEM TO BE SEPARATELY METERED.
2. UTILITY LAYOUT IS CONCEPTUAL AND INFORMATIVE. UTILITY LAYOUT IS SUBJECT TO CHANGE. FINAL UTILITY ENGINEERING DESIGN WILL BE PERFORMED AT THE TIME OF PROJECT PLAN CONSTRUCTION.
3. FIRE HYDRANTS ARE SPACED 300 FEET MAXIMUM.

0 25' 75' 150'

NORTH

facebook west campus

312 & 313 CONSTITUTION DR.
MENLO PARK, CALIFORNIA

WI.5: PROPOSED WATER SYSTEM

SCALE: 1"=75'
11X17 SCALE IS 1"=150'

DECEMBER 3 2012

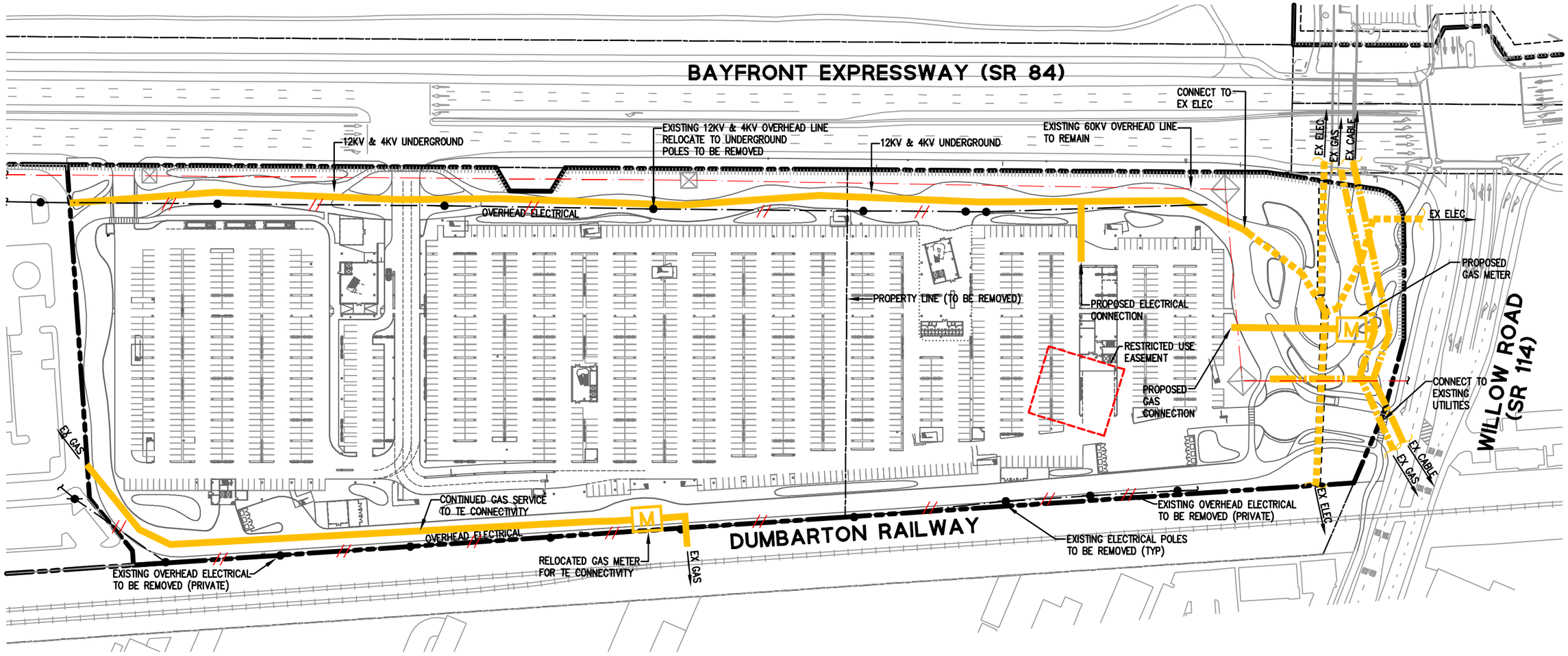

LEGEND & ABBREVIATIONS

- EXISTING GAS LINE
- EXISTING CABLE
- EXISTING ELECTRICAL
- PROPOSED JOINT TRENCH (GAS, CABLE, ELECTRICAL)
- EXISTING 60KV ELECTRICAL OVERHEAD LINE
- EXISTING ELECTRICAL OVERHEAD LINE TO BE REMOVED
- PROPERTY LINE
- EASEMENT
- BAYFRONT EXPRESSWAY (SR 84) RIGHT-OF-WAY
- NON-ACCESS AREA (CALTRANS)

NOTES

1. UTILITY LAYOUT IS CONCEPTUAL AND INFORMATIVE. UTILITY LAYOUT IS SUBJECT TO CHANGE. FINAL UTILITY ENGINEERING DESIGN WILL BE PERFORMED AT THE TIME OF PROJECT PLAN CONSTRUCTION.
2. 12KV & 4KV ON NORTH SIDE OF PROPERTY WILL BE RELOCATED UNDERGROUND.

0 25' 75' 150'

NORTH

facebook west campus

312 & 313 CONSTITUTION DR.
MENLO PARK, CALIFORNIA

WI.6: PROPOSED JOINT TRENCH

SCALE: 1"=75'
11X17 SCALE IS 1"=150'

DECEMBER 3 2012